2026 Z H2 SE ABS

PARTS DIAGRAM

Handlebar

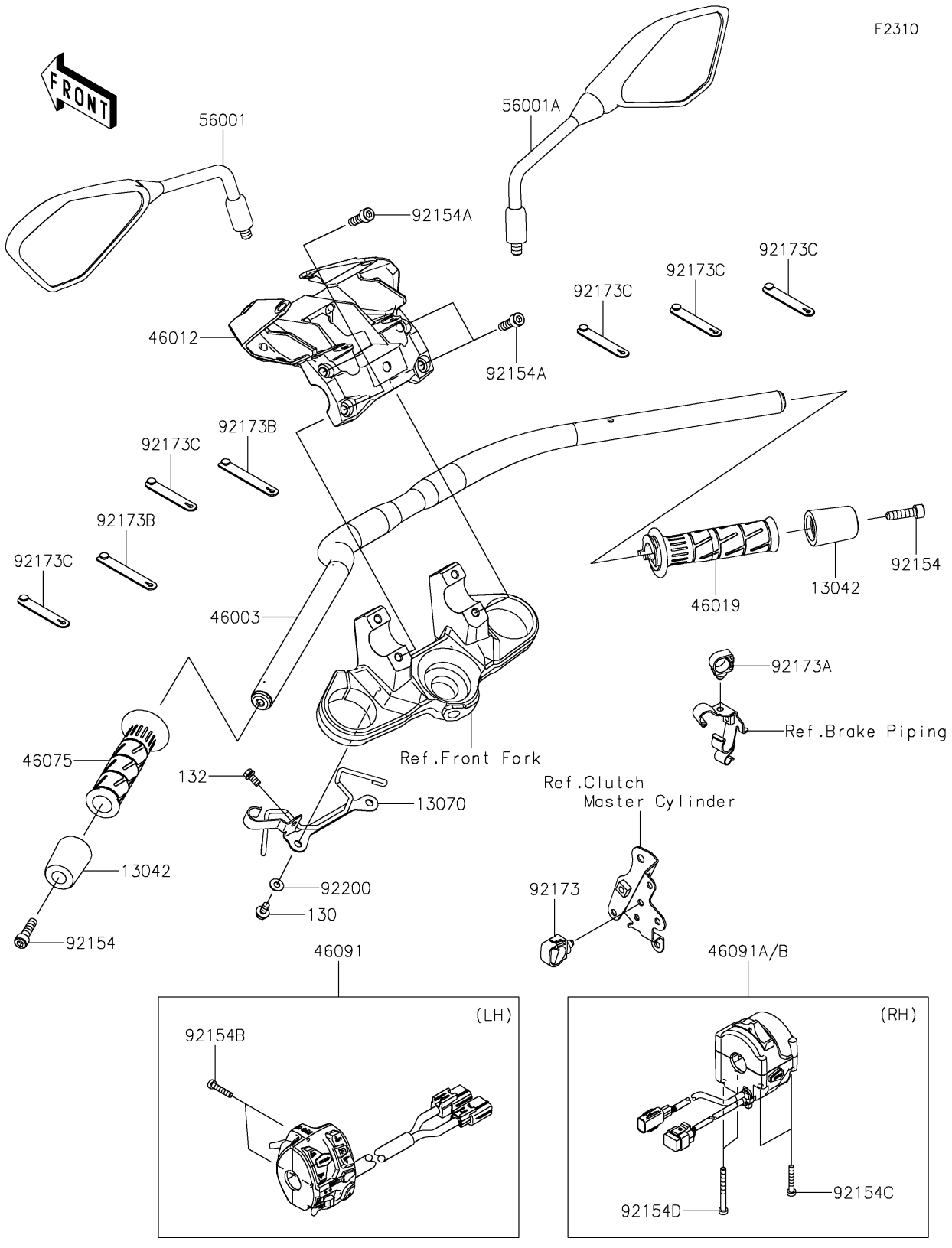

© 2026 Kawasaki Motors Corp., U.S.A.

2026 Z H2 SE ABS

PARTS LIST

Handlebar

ITEM NAME	PART NUMBER	QUANTITY
WEIGHT,HANDLE (Ref # 13042)	13042-5007	2
GUIDE (Ref # 13070)	13070-0977	1
HANDLE (Ref # 46003)	46003-0791	1
HOLDER-HANDLE (Ref # 46012)	46012-0402	1
GRIP-ASSY,THROTTLE (Ref # 46019)	46019-0100	1
GRIP,HANDLE,LH (Ref # 46075)	46075-1144	1
HOUSING-ASSY-CONTROL,LH (Ref # 46091)	46091-0569	1
HOUSING-ASSY-CONTROL,RH (Ref # 46091B)	46091-0693	1
MIRROR-ASSY,LH (Ref # 56001)	56001-0299	1
MIRROR-ASSY,RH (Ref # 56001A)	56001-0300	1
BOLT,SOCKET,8X30 (Ref # 92154)	92154-0502	2
BOLT,SOCKET,8X25 (Ref # 92154A)	92154-1236	4
BOLT,SOCKET,5X25 (Ref # 92154B)	92154-2596	2
BOLT,5X30 (Ref # 92154C)	92154-3921	2
BOLT,5X50 (Ref # 92154D)	92154-3922	2
CLAMP (Ref # 92173)	92173-0861	1
CLAMP,HOLDER CLIP (Ref # 92173A)	92173-0868	1
CLAMP (Ref # 92173B)	92173-2194	2
CLAMP (Ref # 92173C)	92173-2199	5
WASHER,6.1X14X1 (Ref # 92200)	92200-1948	2
BOLT-FLANGED,6X12 (Ref # 130)	130BA0612	2
BOLT-FLANGED-SMALL,6X12 (Ref # 132)	132BB0612	1

© 2026 Kawasaki Motors Corp., U.S.A.