2025 Z H2 SE

PARTS DIAGRAM

Stand(s)

Kawasaki
Let the Good Times Roll®

F2190

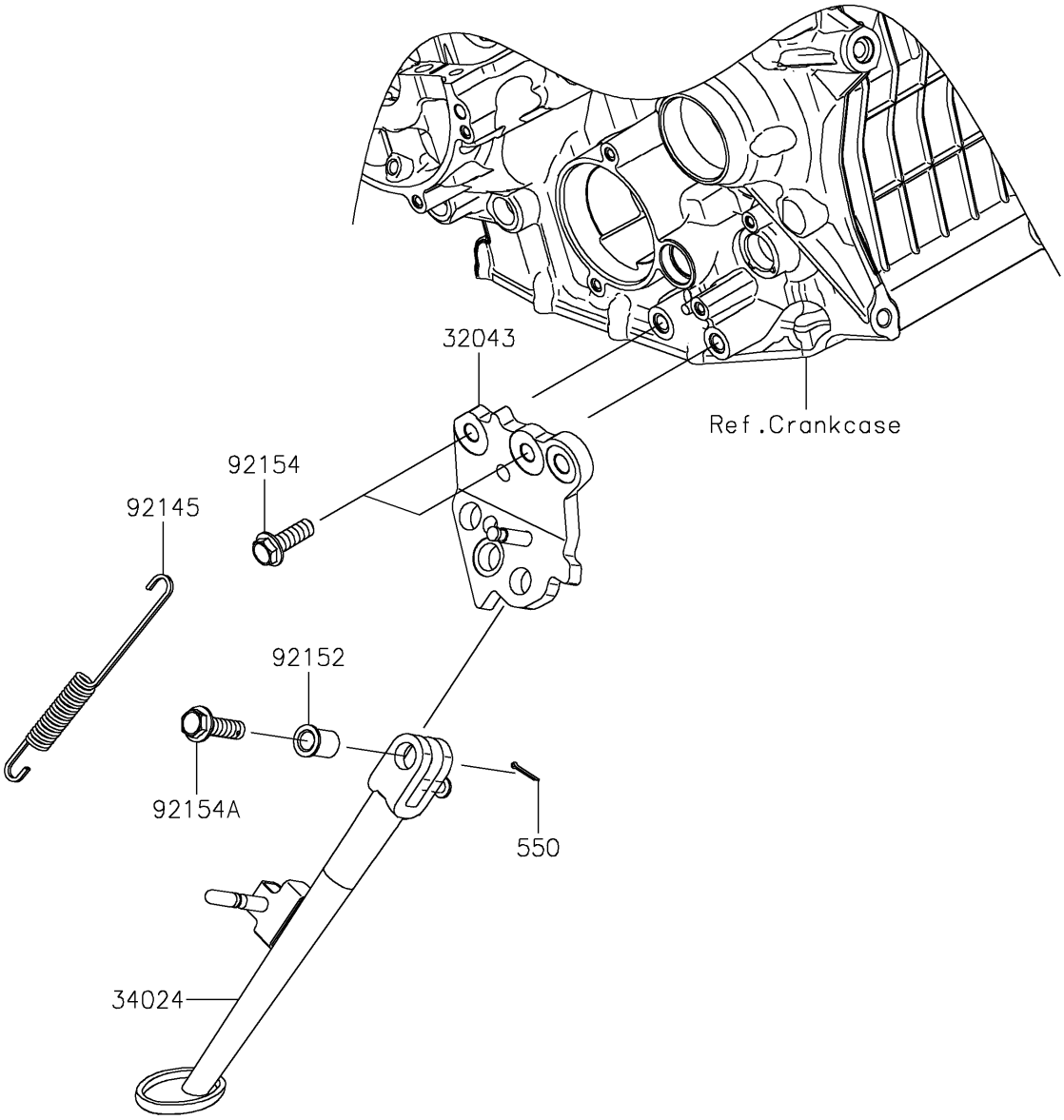

© 2026 Kawasaki Motors Corp., U.S.A.

2025 Z H2 SE

PARTS LIST

Stand(s)

ITEM NAME	PART NUMBER	QUANTITY
BRACKET-STAND (Ref # 32043)	32043-0658	1
STAND-SIDE (Ref # 34024)	34024-0164	1
SPRING,14X144 (Ref # 92145)	92145-1792	1
COLLAR,10.2X15X20.1 (Ref # 92152)	92152-1828	1
BOLT,FLANGED,10X30 (Ref # 92154)	92154-1645	2
BOLT,FLANGED,10X35,MEC (Ref # 92154A)	92154-2905	1
PIN-COTTER,2.0X15 (Ref # 550)	550AA2015	1

© 2026 Kawasaki Motors Corp., U.S.A.