2023 Z H2 SE

PARTS DIAGRAM

Radiator

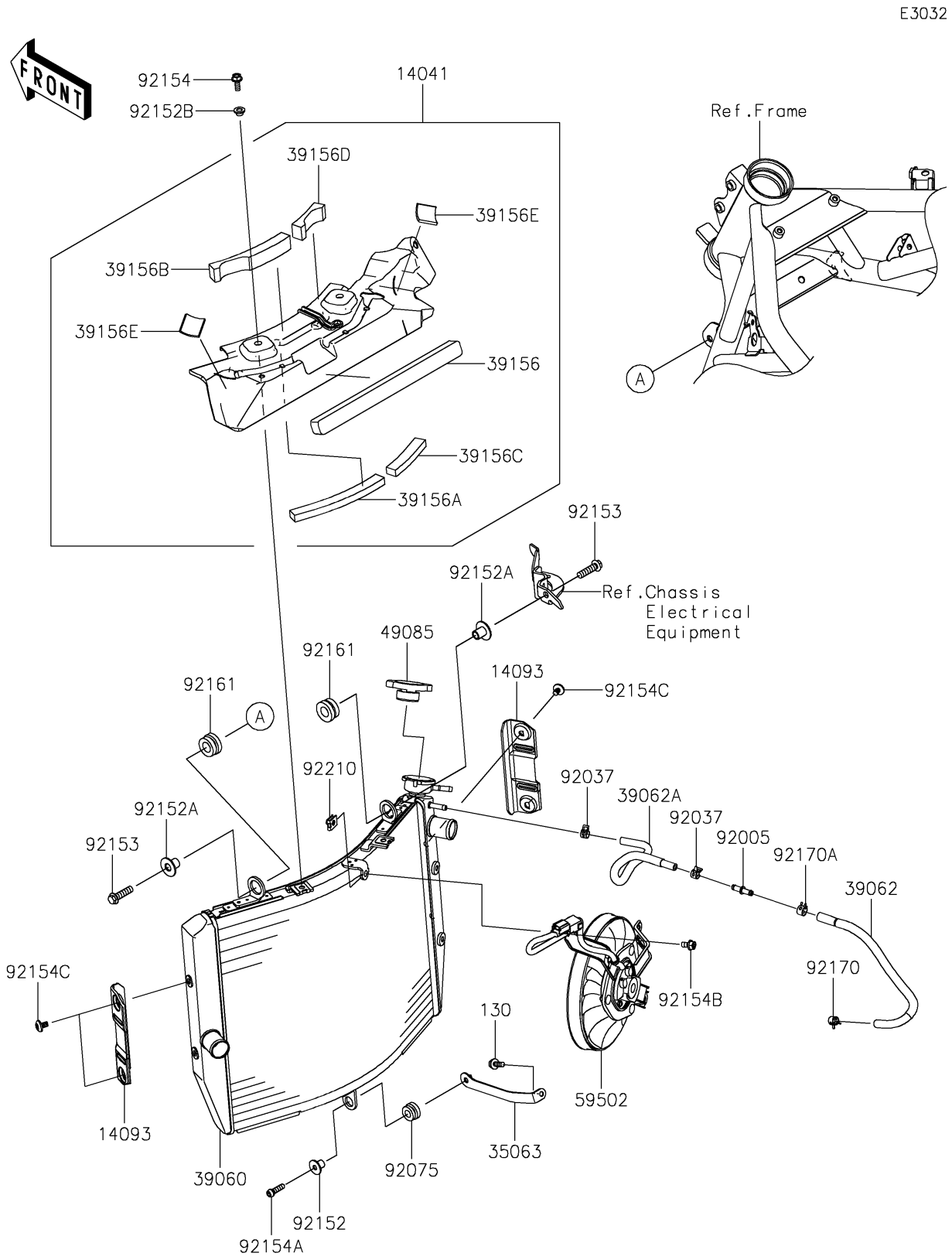

© 2026 Kawasaki Motors Corp., U.S.A.

2023 Z H2 SE

PARTS LIST

Radiator

ITEM NAME	PART NUMBER	QUANTITY
COVER-COMP,HEAT (Ref # 14041)	14041-0620	1
COVER (Ref # 14093)	14093-0984	2
STAY (Ref # 35063)	35063-1507	1
RADIATOR (Ref # 39060)	39060-0740	1
HOSE-COOLING (Ref # 39062)	39062-0869	1
HOSE-COOLING (Ref # 39062A)	39062-0878	1
PAD,20X285X15 (Ref # 39156)	39156-1840	1
PAD,141X15X10 (Ref # 39156A)	39156-2250	1
PAD (Ref # 39156B)	39156-2251	1
PAD,80X15X10 (Ref # 39156C)	39156-2327	1
PAD (Ref # 39156D)	39156-2328	1
PAD,27X27X3 (Ref # 39156E)	39156-2525	2
CAP-ASSY-PRESSURE (Ref # 49085)	49085-0006	1
FAN-ASSY (Ref # 59502)	59502-0629	1
FITTING (Ref # 92005)	92005-0721	1
CLAMP,TUBE (Ref # 92037)	92037-1461	2
DAMPER,RUBBER (Ref # 92075)	92075-1123	1
COLLAR,6.5X10X13.1 (Ref # 92152)	92152-0332	1
COLLAR (Ref # 92152A)	92152-0439	2
COLLAR (Ref # 92152B)	92152-2111	2
BOLT,FLANGED,8X30 (Ref # 92153)	92153-1086	2
BOLT,FLANGED,6X16 (Ref # 92154)	92154-0887	2
BOLT,SOCKET,6X22 (Ref # 92154A)	92154-1456	1
BOLT (Ref # 92154B)	92154-1648	3
BOLT,SOCKET,6X10 (Ref # 92154C)	92154-4209	4
DAMPER (Ref # 92161)	92161-0304	2
CLAMP (Ref # 92170)	92170-1493	1
CLAMP (Ref # 92170A)	92170-1872	1
NUT (Ref # 92210)	92210-1323	1

© 2026 Kawasaki Motors Corp., U.S.A.

2023 Z H2 SE

PARTS LIST

Radiator

ITEM NAME	PART NUMBER	QUANTITY
BOLT-FLANGED,6X16 (Ref # 130)	130CC0616	1

© 2026 Kawasaki Motors Corp., U.S.A.