2023 Z H2 SE

PARTS DIAGRAM

Oil Pan

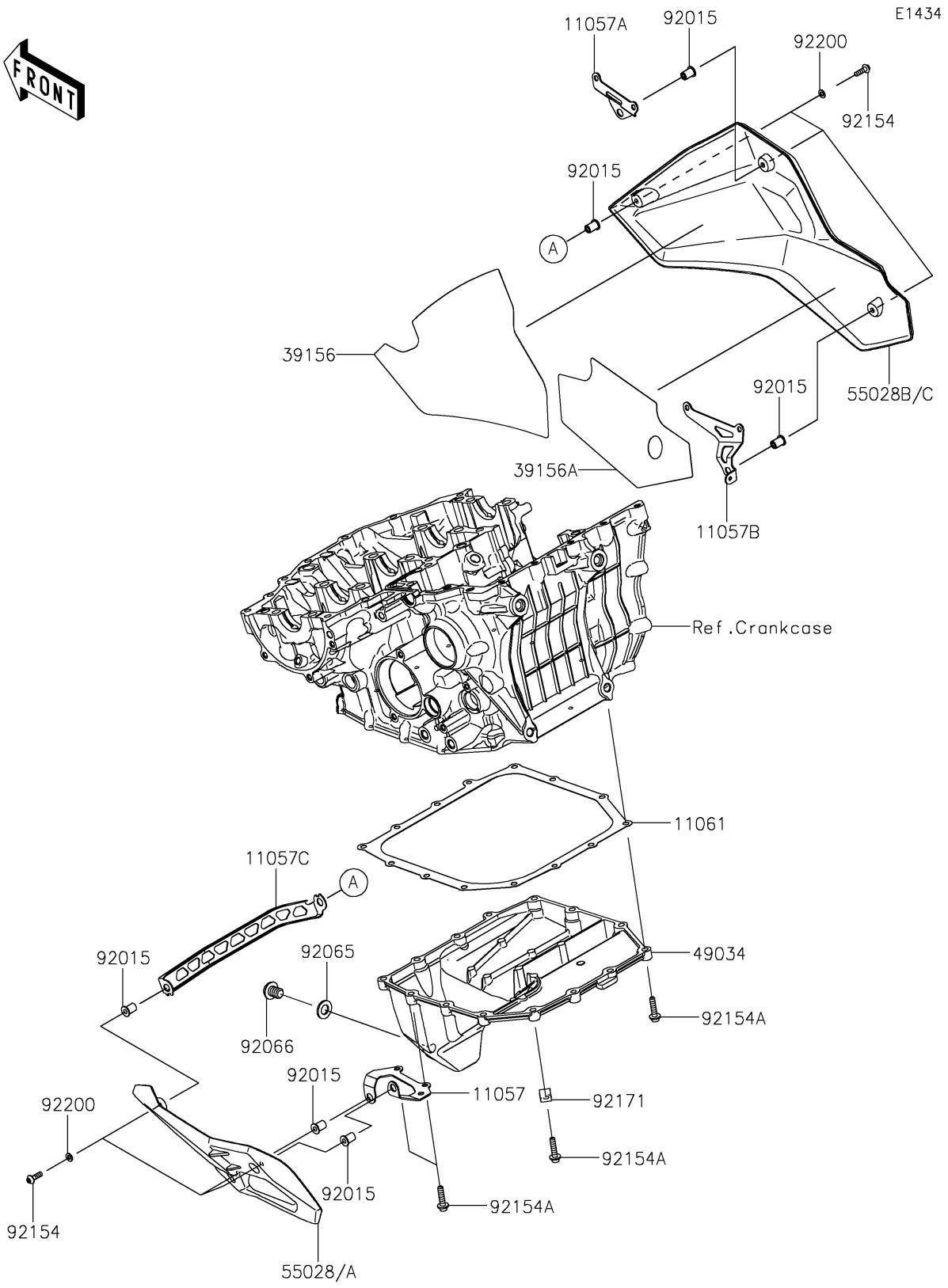

© 2026 Kawasaki Motors Corp., U.S.A.

2023 Z H2 SE

PARTS LIST

Oil Pan

ITEM NAME	PART NUMBER	QUANTITY
BRACKET,LWR COWLING,LH (Ref # 11057)	11057-2962	1
BRACKET,LWR COWLING,RH,FR (Ref # 11057A)	11057-2963	1
BRACKET,LWR COWLING,RH,RR (Ref # 11057B)	11057-2964	1
BRACKET,LWR COWLING,CNT (Ref # 11057C)	11057-2965	1
GASKET,OIL PAN (Ref # 11061)	11061-0943	1
PAD,LWR COWLING,RH,FR (Ref # 39156)	39156-2523	1
PAD,LWR COWLING,RH,RR (Ref # 39156A)	39156-2524	1
PAN-OIL (Ref # 49034)	49034-0570	1
COWLING,LWR,LH,G.B.GREEN (Ref # 55028)	55028-0807-40R	1
COWLING,LWR,RH,G.B.GREEN (Ref # 55028B)	55028-0808-40R	1
NUT,WELL,5MM (Ref # 92015)	92015-1757	6
GASKET,12X22X2 (Ref # 92065)	92065-097	1
PLUG,DRAIN (Ref # 92066)	92066-0799	1
BOLT,SOCKET,5X16 (Ref # 92154)	92154-0209	6
BOLT,SOCKET,6X25 (Ref # 92154A)	92154-1461	14
CLAMP (Ref # 92171)	92171-0534	1
WASHER,5.2X10X1.0 (Ref # 92200)	92200-1820	6

© 2026 Kawasaki Motors Corp., U.S.A.