2023 Versys-X 300 ABS

PARTS DIAGRAM

Accessory(High Seat)

Kawasaki
Let the Good Times Roll®

F2910G

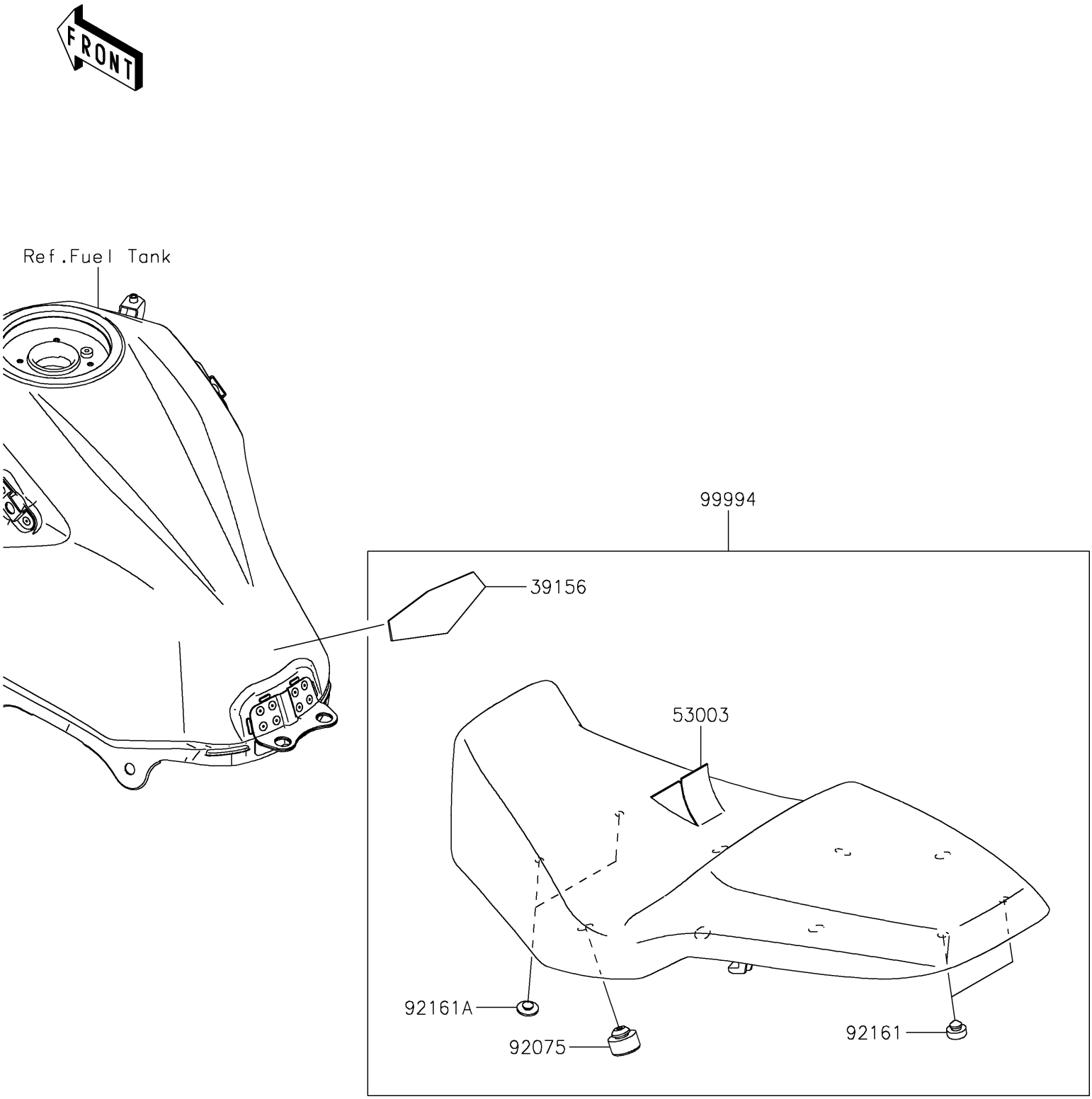

© 2026 Kawasaki Motors Corp., U.S.A.

2023 Versys-X 300 ABS

PARTS LIST

Accessory(High Seat)

ITEM NAME	PART NUMBER	QUANTITY
PAD (Ref # 39156)	39156-0801	1
LEATHER,BLACK (Ref # 53003)	53003-0447-MA	1
DAMPER (Ref # 92075)	92075-015	6
DAMPER,10X20X8 (Ref # 92161)	92161-0855	2
DAMPER,8X22X10 (Ref # 92161A)	92161-1685	2
KIT-ACCESSORY,HIGH SEAT (Ref # 99994)	99994-1002	1

© 2026 Kawasaki Motors Corp., U.S.A.