2023 Versys-X 300 ABS

PARTS DIAGRAM

Footrests

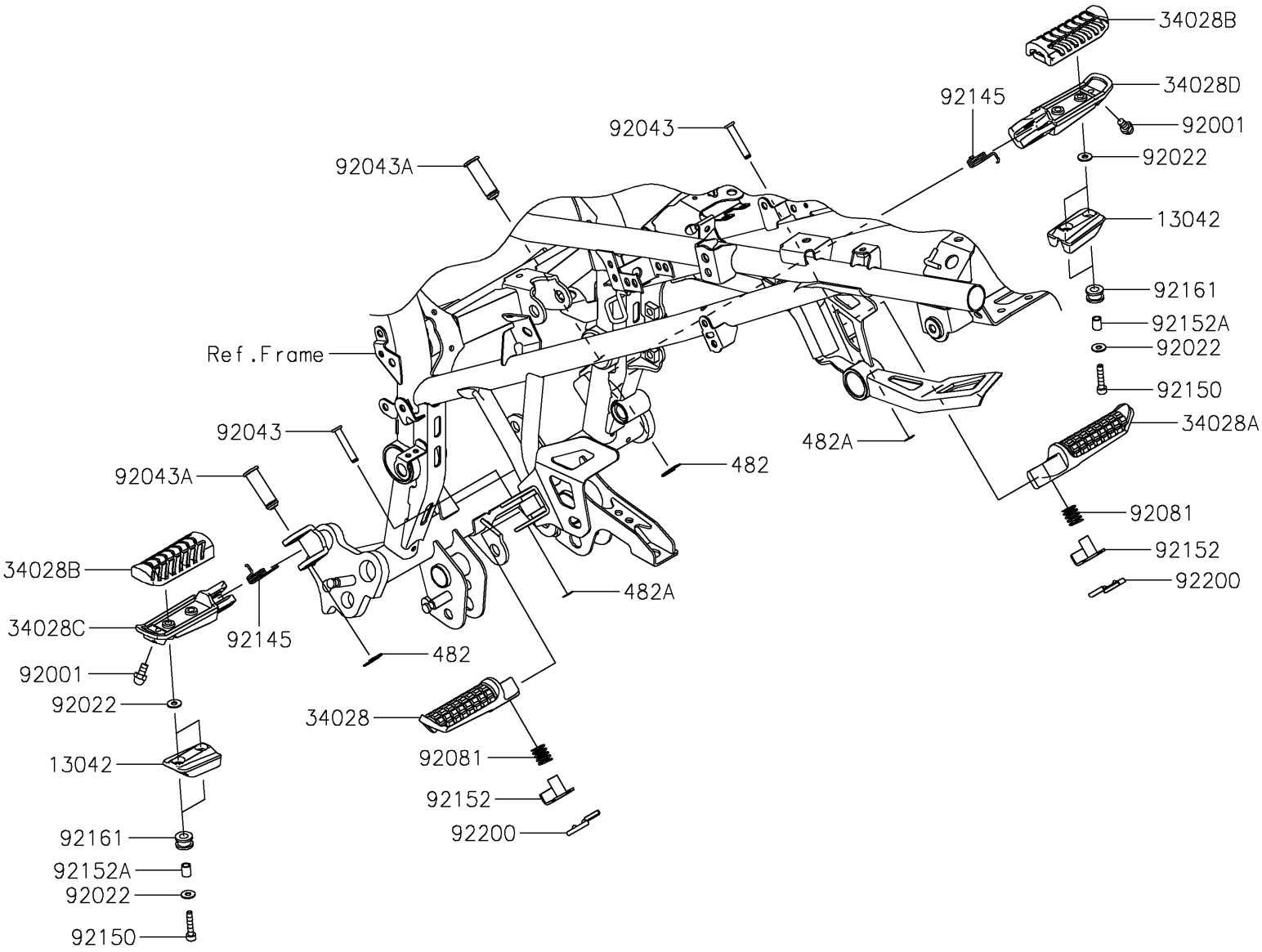

© 2026 Kawasaki Motors Corp., U.S.A.

2023 Versys-X 300 ABS

PARTS LIST

Footrests

ITEM NAME	PART NUMBER	QUANTITY
WEIGHT,STEP (Ref # 13042)	13042-0759	2
STEP,RR,LH (Ref # 34028)	34028-0334	1
STEP,RR,RH (Ref # 34028A)	34028-0335	1
STEP,RUBBER (Ref # 34028B)	34028-0349	2
STEP,FR,LH (Ref # 34028C)	34028-0350	1
STEP,FR,RH (Ref # 34028D)	34028-0351	1
BOLT,BANK SENSOR (Ref # 92001)	92001-1905	2
WASHER,5.2X13X1 (Ref # 92022)	92022-1380	8
PIN,5X31.8 (Ref # 92043)	92043-0907	2
PIN,12X39 (Ref # 92043A)	92043-0924	2
SPRING,STEP,RR (Ref # 92081)	92081-1612	2
SPRING,STEP RETURN (Ref # 92145)	92145-0723	2
BOLT,SOCKET,5X25 (Ref # 92150)	92150-1684	4
COLLAR,STEP (Ref # 92152)	92152-0658	2
COLLAR,5.6X8X10.5 (Ref # 92152A)	92152-1545	4
DAMPER,8X16X10 (Ref # 92161)	92161-1935	4
WASHER (Ref # 92200)	92200-1892	2
CIRCLIP-TYPE-E,10MM (Ref # 482)	482EA0100	2
CIRCLIP-TYPE-E (Ref # 482A)	482EA5000	2

© 2026 Kawasaki Motors Corp., U.S.A.