2025 Teryx KRX 1000 eS

PARTS DIAGRAM

Seat

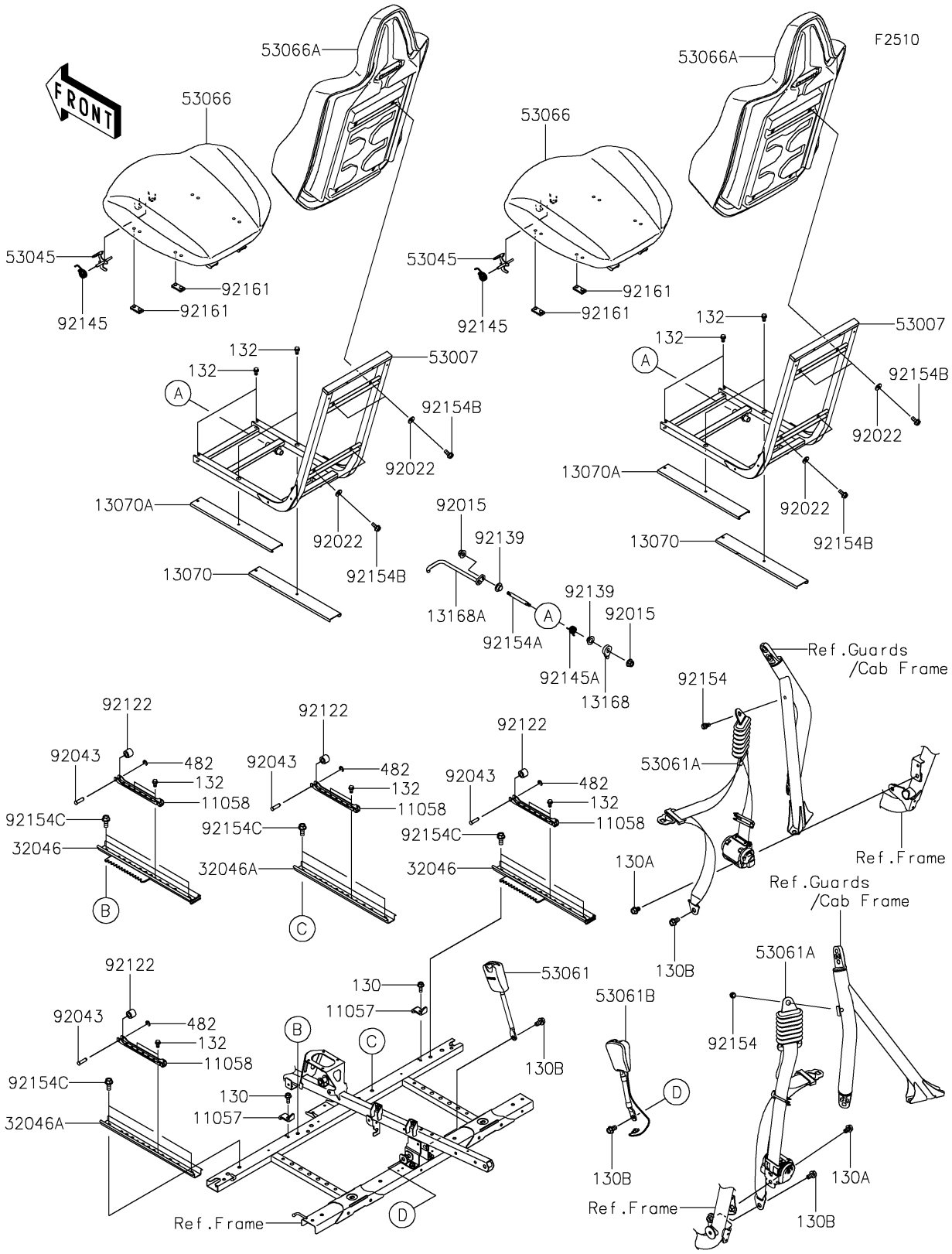

© 2026 Kawasaki Motors Corp., U.S.A.

2025 Teryx KRX 1000 eS

PARTS LIST

Seat

ITEM NAME	PART NUMBER	QUANTITY

© 2026 Kawasaki Motors Corp., U.S.A.