2025 Teryx KRX 1000 eS

PARTS DIAGRAM

Converter Cover

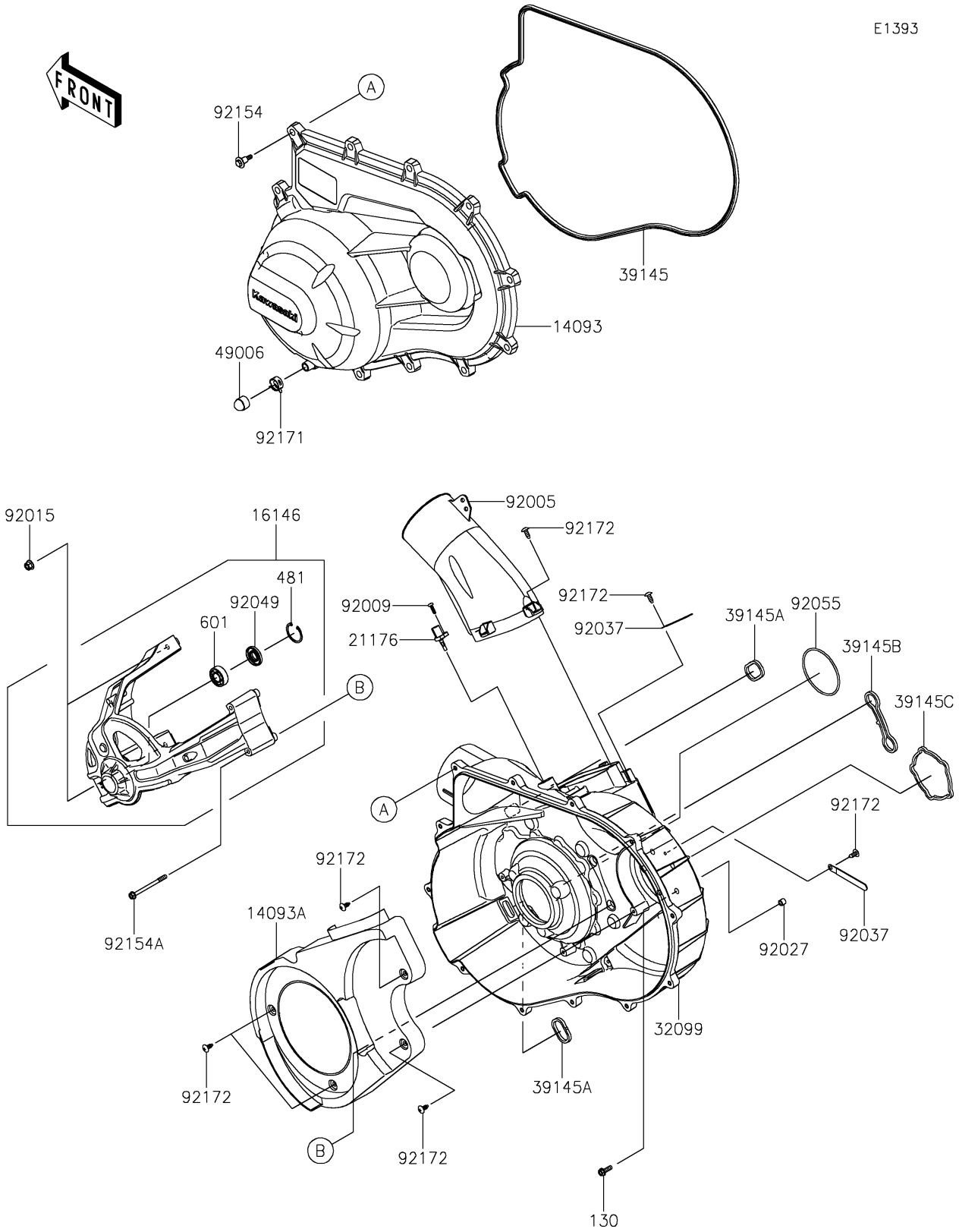

© 2026 Kawasaki Motors Corp., U.S.A.

2025 Teryx KRX 1000 eS

PARTS LIST

Converter Cover

ITEM NAME	PART NUMBER	QUANTITY
COVER,CVT (Ref # 14093)	14093-0774	1
COVER (Ref # 14093A)	14093-0775	1
COVER-ASSY (Ref # 16146)	16146-0840	1
SENSOR,AIR TEMPERATURE (Ref # 21176)	21176-0048	1
CASE,CVT (Ref # 32099)	32099-0795	1
TRIM-SEAL,CVT COVER (Ref # 39145)	39145-0711	1
TRIM-SEAL (Ref # 39145A)	39145-0712	2
TRIM-SEAL (Ref # 39145B)	39145-0713	1
TRIM-SEAL (Ref # 39145C)	39145-0714	1
BOOT,DRAIN (Ref # 49006)	49006-3718	1
FITTING (Ref # 92005)	92005-0978	1
SCREW,TAPPING,5X16 (Ref # 92009)	92009-1264	1
NUT,FLANGED,LOCK,8MM (Ref # 92015)	92015-1668	2
COLLAR,6.8X10X8.5 (Ref # 92027)	92027-129	5
CLAMP (Ref # 92037)	92037-1993	2
SEAL-OIL,TC 15X35X6 (Ref # 92049)	92049-0816	1
RING-O,84.4X3.1 (Ref # 92055)	92055-0916	1
BOLT,CVT COVER (Ref # 92154)	92154-1522	12
BOLT,6X80 (Ref # 92154A)	92154-3862	2
CLAMP (Ref # 92171)	92171-0329	1
SCREW,6X16 (Ref # 92172)	92172-0284	10
BOLT-FLANGED,6X20 (Ref # 130)	130BA0620	5
CIRCLIP-TYPE-C,35MM (Ref # 481)	481J3500	1
BEARING-BALL,#6202C3 (Ref # 601)	601B6202	1

© 2026 Kawasaki Motors Corp., U.S.A.