2018 TERYX4™ LE CAMO

PARTS DIAGRAM

Frame

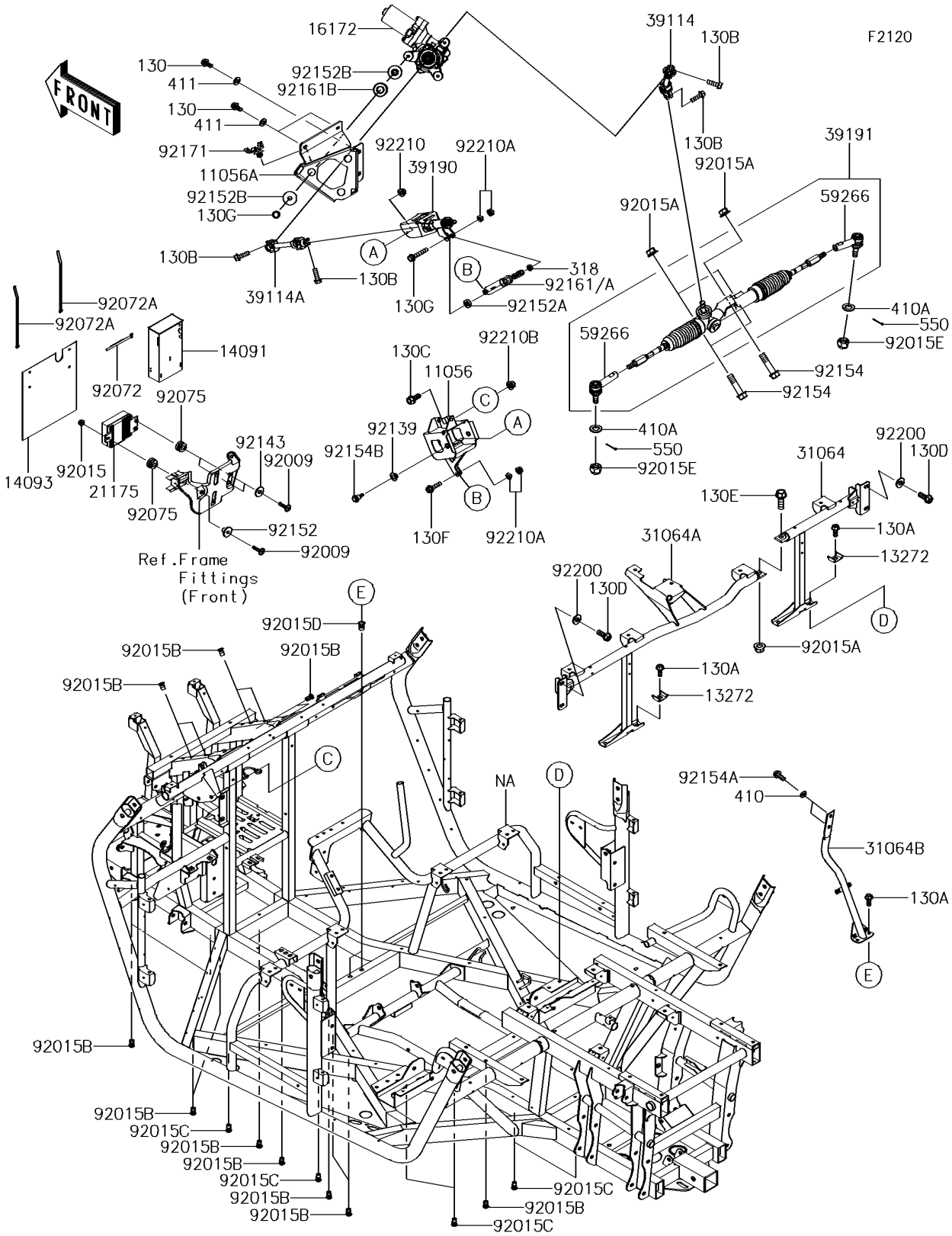

© 2026 Kawasaki Motors Corp., U.S.A.

2018 TERYX4™ LE CAMO

PARTS LIST

Frame

ITEM NAME	PART NUMBER	QUANTITY

© 2026 Kawasaki Motors Corp., U.S.A.