2020 TERYX® CAMO

PARTS DIAGRAM

Sun Top

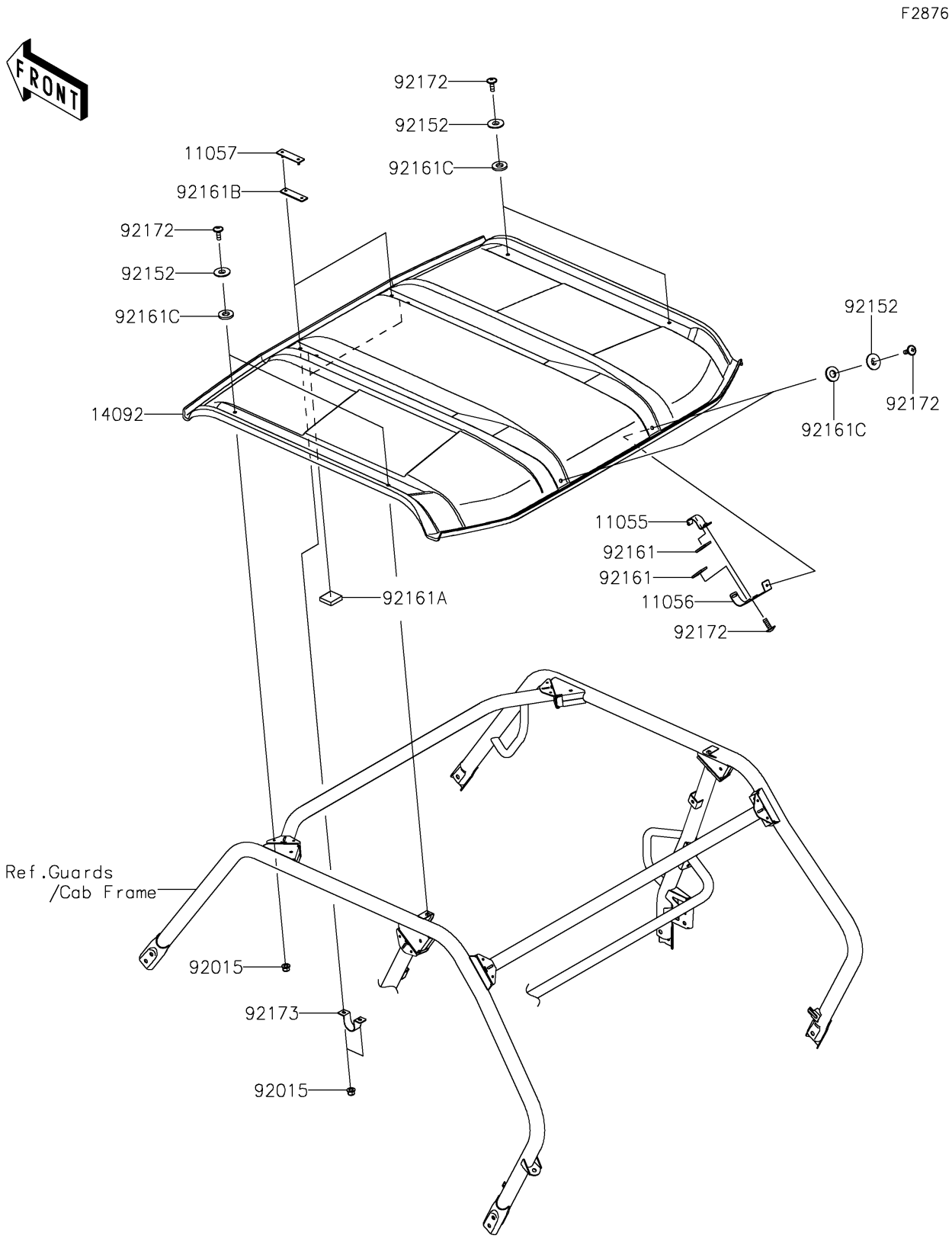

© 2026 Kawasaki Motors Corp., U.S.A.

2020 TERYX® CAMO

PARTS LIST

Sun Top

ITEM NAME	PART NUMBER	QUANTITY
BRACKET,WINDSHIELD (Ref # 11055)	11055-0914	2
BRACKET (Ref # 11056)	11056-2508	2
BRACKET (Ref # 11057)	11057-0074	2
COVER,SUN TOP (Ref # 14092)	14092-1073	1
NUT,LOCK,FLANGED,6MM (Ref # 92015)	92015-1339	6
COLLAR,6.3X26X5.1 (Ref # 92152)	92152-1569	6
DAMPER,25X65X4.7 (Ref # 92161)	92161-0978	4
DAMPER,25.4X25.4X6.3 (Ref # 92161A)	92161-1405	2
DAMPER (Ref # 92161B)	92161-1476	2
DAMPER (Ref # 92161C)	92161-1477	6
SCREW,6X18 (Ref # 92172)	92172-0002	8
CLAMP,R22 (Ref # 92173)	92173-0884	2

© 2026 Kawasaki Motors Corp., U.S.A.