2020 TERYX® CAMO

PARTS DIAGRAM

Decals

F2861

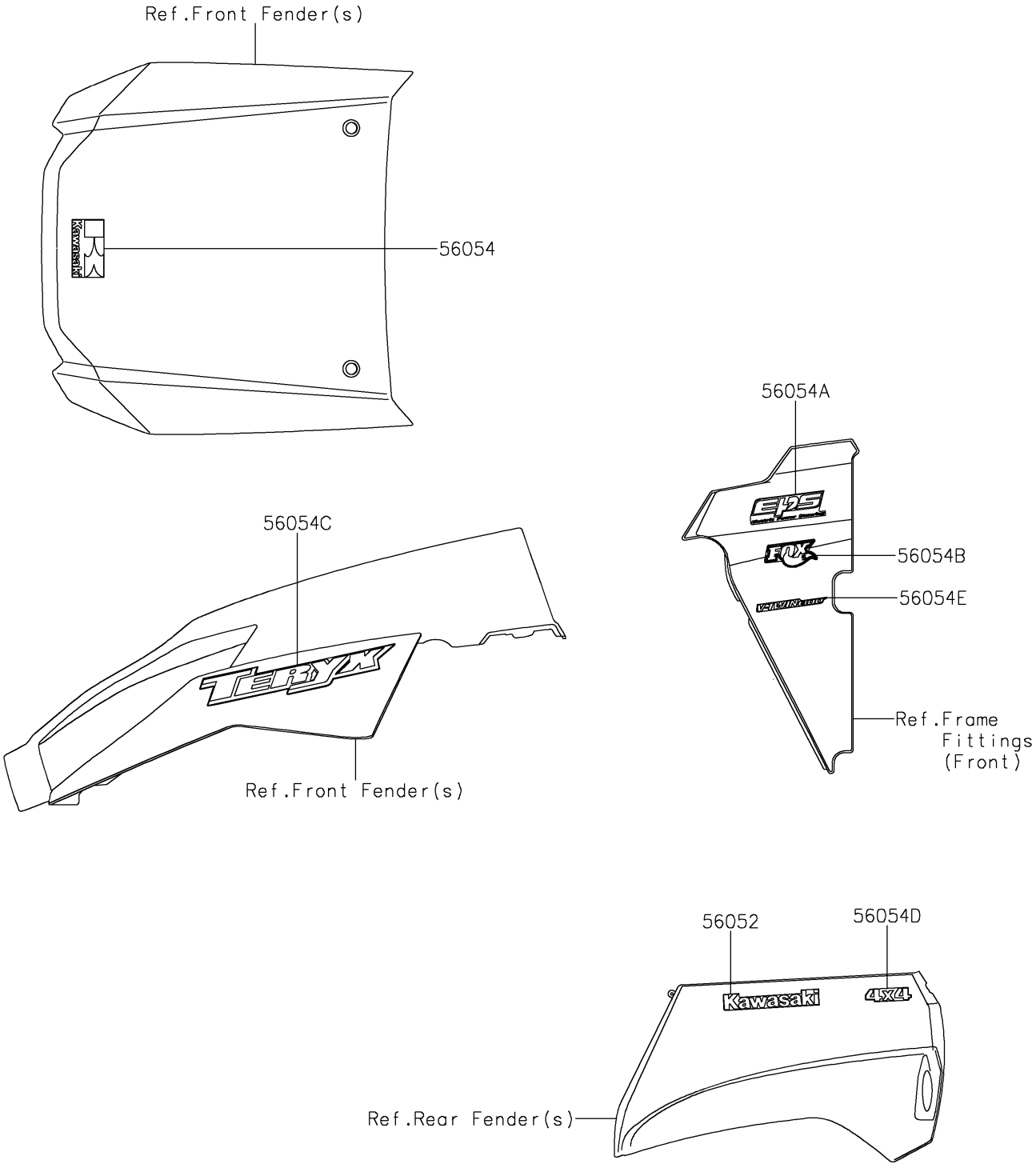

© 2026 Kawasaki Motors Corp., U.S.A.

2020 TERYX® CAMO

PARTS LIST

Decals

ITEM NAME	PART NUMBER	QUANTITY
MARK,RR FENDER,KAWASAKI (Ref # 56052)	56052-0437	2
MARK,FR FENDER,K (Ref # 56054)	56054-1263	1
MARK,SIDE GUARD,EPS (Ref # 56054A)	56054-1265	2
MARK,SIDE GUARD,FOX (Ref # 56054B)	56054-1266	2
MARK,FR FENDER,TERYX (Ref # 56054C)	56054-1847	2
MARK,RR FENDER,4X4 (Ref # 56054D)	56054-1848	2
MARK,SIDE GUARD,V-TWIN800 (Ref # 56054E)	56054-1865	2

© 2026 Kawasaki Motors Corp., U.S.A.