2020 TERYX® CAMO

PARTS DIAGRAM

Guard(s)(HJF-HLF)

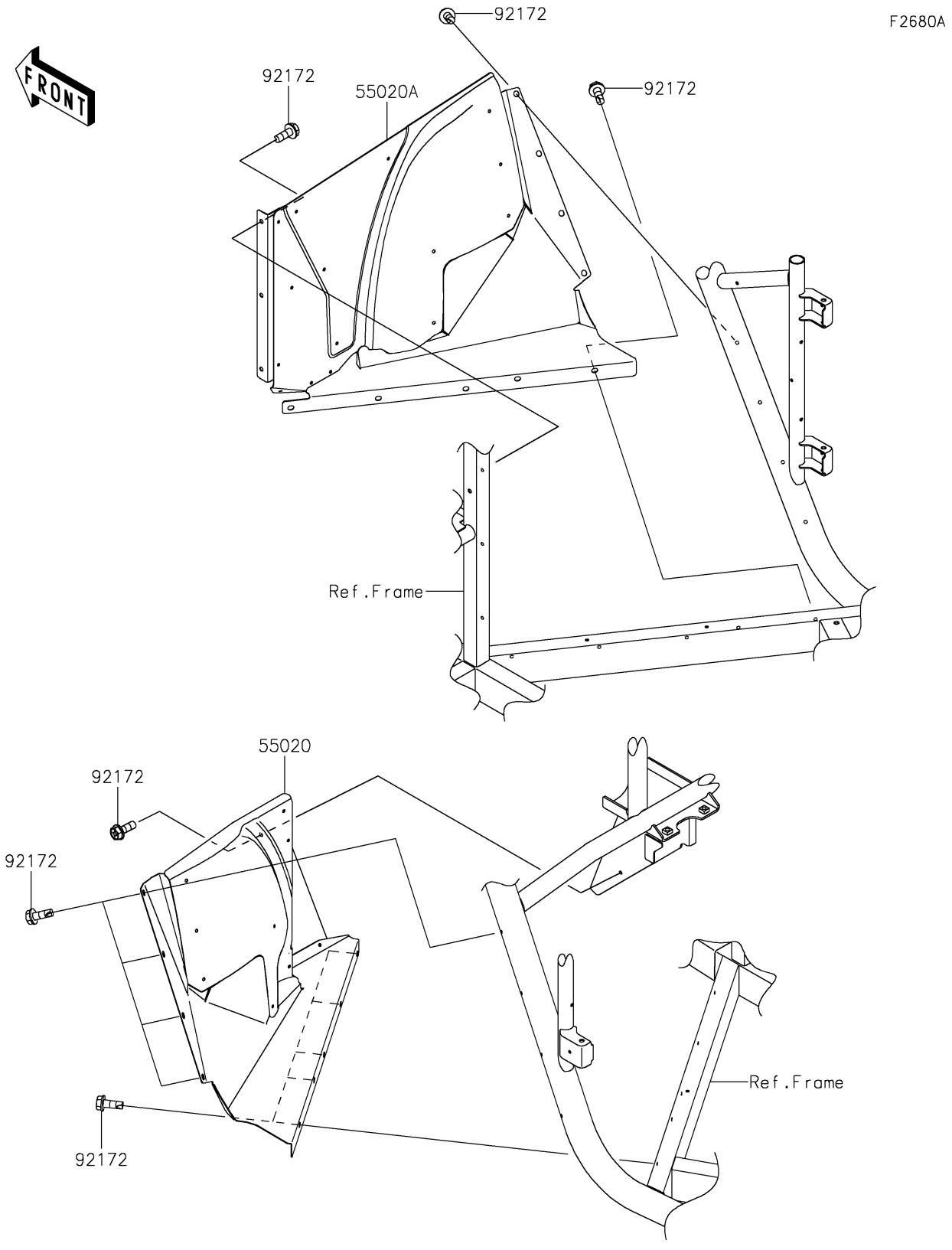

© 2026 Kawasaki Motors Corp., U.S.A.

2020 TERYX® CAMO

PARTS LIST

Guard(s)(HJF-HLF)

ITEM NAME	PART NUMBER	QUANTITY
GUARD,1PIECE,LH (Ref # 55020)	55020-2167	1
GUARD,1PIECE,RH (Ref # 55020A)	55020-2168	1
SCREW,TAPPING,6X16 (Ref # 92172)	92172-0869	22

© 2026 Kawasaki Motors Corp., U.S.A.