2020 TERYX® CAMO

PARTS DIAGRAM

Seat(HJF-HLF)

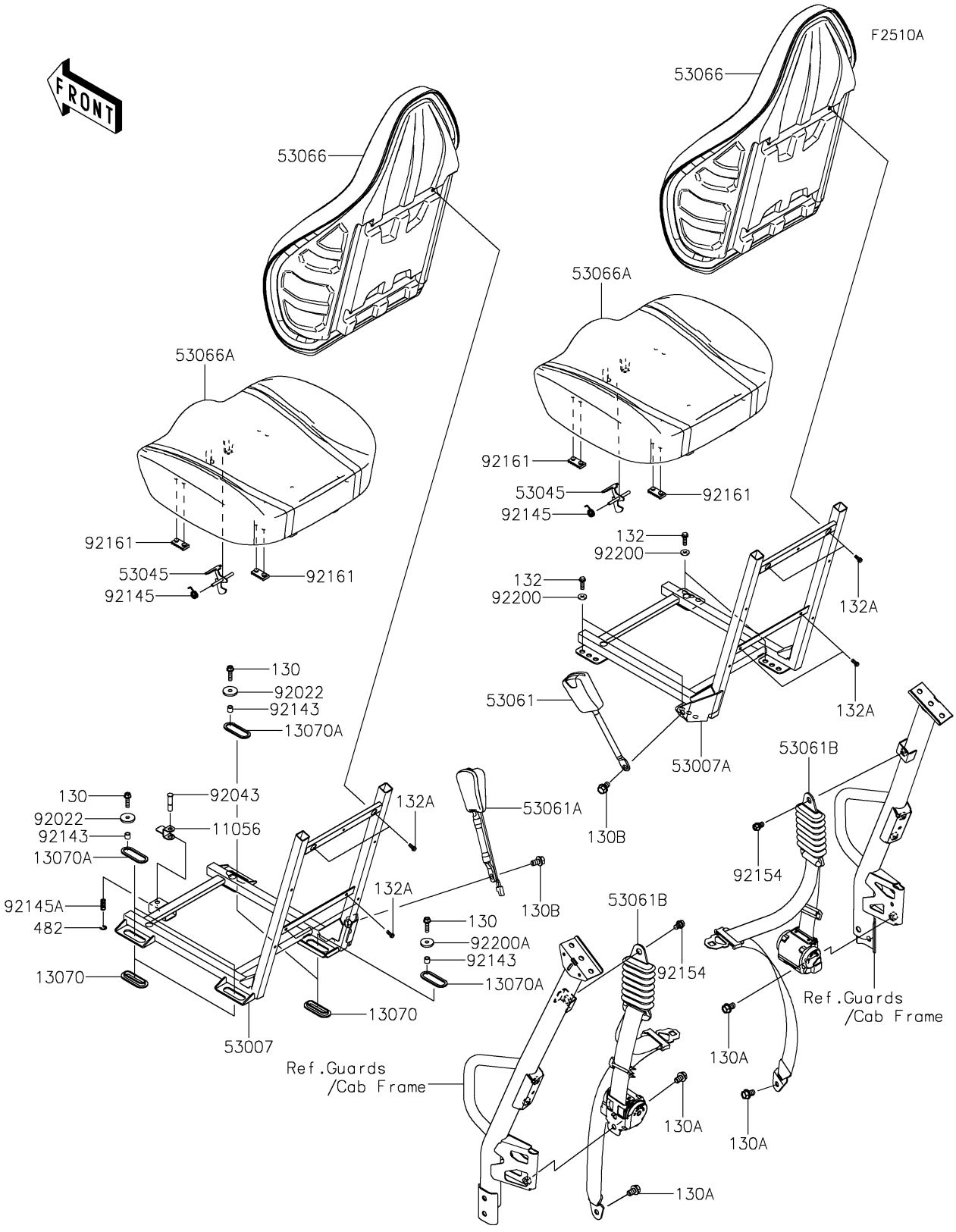

© 2026 Kawasaki Motors Corp., U.S.A.

2020 TERYX® CAMO

PARTS LIST

Seat(HJF-HLF)

ITEM NAME	PART NUMBER	QUANTITY
BRACKET (Ref # 11056)	11056-7917	1
GUIDE (Ref # 13070)	13070-0806	4
GUIDE (Ref # 13070A)	13070-0807	4
FRAME-SEAT,FR,LH (Ref # 53007)	53007-0375	1
FRAME-SEAT,FR,RH (Ref # 53007A)	53007-0376	1
HOOK-ASSY (Ref # 53045)	53045-0019	2
BELT-SEAT,BUCKLE (Ref # 53061)	53061-0039	1
BELT-SEAT,BUCKLE,SW. (Ref # 53061A)	53061-0338	1
BELT-SEAT,RETRACTOR,L=2500 (Ref # 53061B)	53061-0345	2
SEAT-ASSY,BACK,BLACK (Ref # 53066)	53066-0323-MA	2
SEAT-ASSY,BASE,BLACK (Ref # 53066A)	53066-0532-MA	2
WASHER (Ref # 92022)	92022-2116	3
PIN (Ref # 92043)	92043-0882	1
COLLAR,8.8X12X11.5 (Ref # 92143)	92143-1340	4
SPRING,SEAT LATCH (Ref # 92145)	92145-0022	2
SPRING (Ref # 92145A)	92145-1682	1
BOLT,FLANGED,10X16 (Ref # 92154)	92154-2089	2
DAMPER,SEAT (Ref # 92161)	92161-1489	8
WASHER,8.2X20.0X2.5 (Ref # 92200)	92200-0205	4
WASHER,8.6X31X4.5 (Ref # 92200A)	92200-1758	1
BOLT-FLANGED,8X30 (Ref # 130)	130BA0830	4
BOLT-FLANGED,12X20 (Ref # 130A)	130BA1220	4
BOLT-FLANGED,13X22 (Ref # 130B)	130BB1222	2
BOLT-FLANGED-SMALL,8X25 (Ref # 132)	132BA0825	4
BOLT-FLANGED-SMALL,6X14 (Ref # 132A)	132BB0614	8
CIRCLIP-TYPE-E,8MM (Ref # 482)	482EA8000	1

© 2026 Kawasaki Motors Corp., U.S.A.