2020 TERYX® CAMO

PARTS DIAGRAM

Fuel Tank(HGF-HKF)

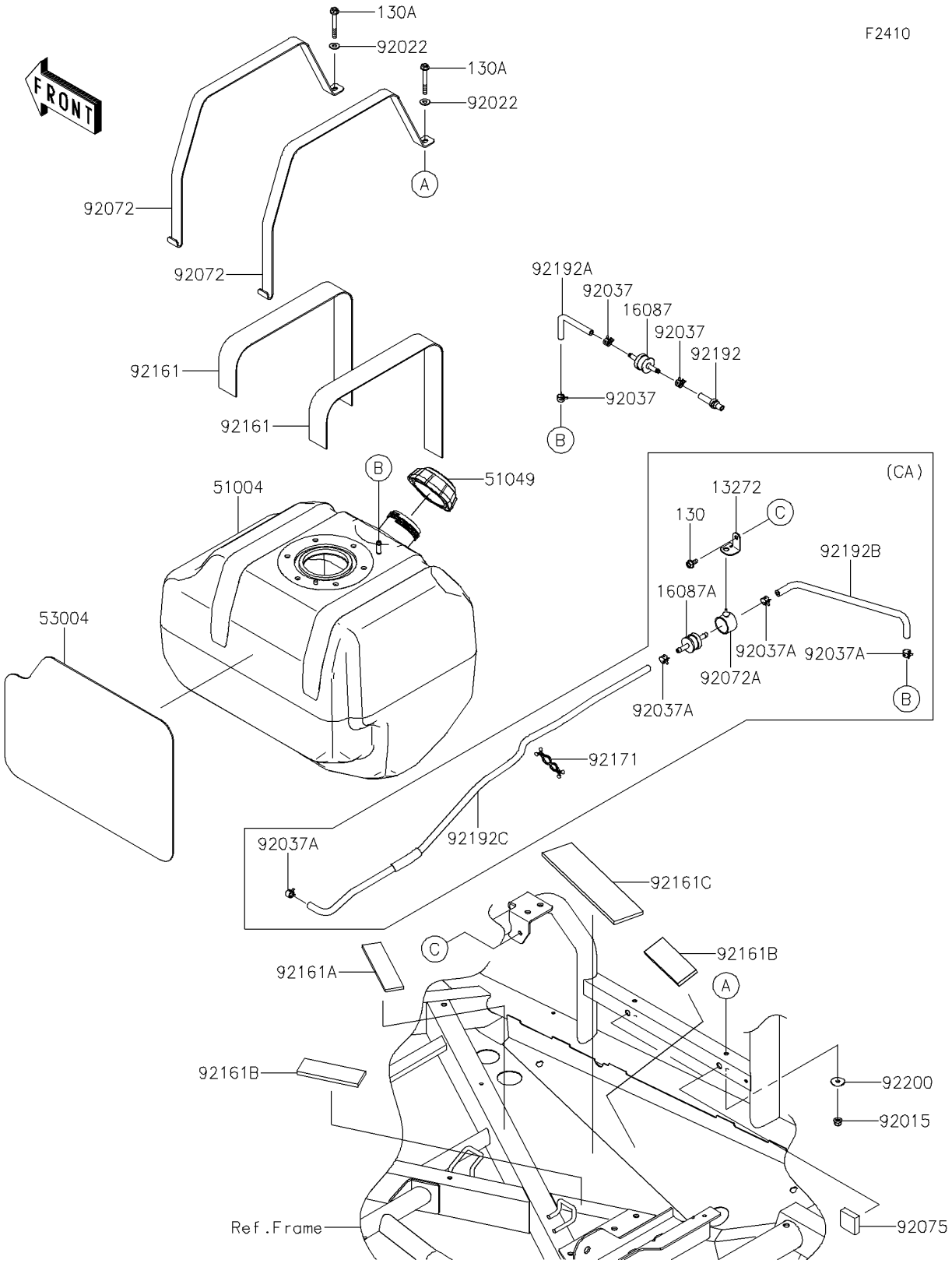

© 2026 Kawasaki Motors Corp., U.S.A.

2020 TERYX® CAMO

PARTS LIST

Fuel Tank(HGF-HKF)

ITEM NAME	PART NUMBER	QUANTITY
PLATE (Ref # 13272)	13272-2276	1
VALVE-CHECK (Ref # 16087A)	16087-0009	1
TANK-FUEL (Ref # 51004)	51004-0002	1
CAP-TANK,FUEL (Ref # 51049)	51049-0718	1
MAT (Ref # 53004)	53004-0554	1
NUT,LOCK,FLANGED,6MM (Ref # 92015)	92015-1339	2
WASHER,7X16X1.2 (Ref # 92022)	92022-1344	2
CLAMP (Ref # 92037A)	92037-2113	4
BAND,FUEL TANK (Ref # 92072)	92072-0704	2
BAND (Ref # 92072A)	92072-1438	1
DAMPER (Ref # 92075)	92075-1882	2
DAMPER,FUEL TANK (Ref # 92161)	92161-0794	2
DAMPER,31.1X130X5 (Ref # 92161A)	92161-0936	1
DAMPER,38X105X7 (Ref # 92161B)	92161-0948	2
DAMPER,55X225X6.35 (Ref # 92161C)	92161-1811	1
CLAMP (Ref # 92171)	92171-0476	1
TUBE,5X10.4X40/240 (Ref # 92192B)	92192-1735	1
TUBE,5X10.4X40/900 (Ref # 92192C)	92192-1736	1
WASHER,6.5X22X1.6 (Ref # 92200)	92200-1087	2
BOLT-FLANGED,6X12 (Ref # 130)	130BA0612	1
BOLT-FLANGED,6X50 (Ref # 130A)	130BA0650	2

© 2026 Kawasaki Motors Corp., U.S.A.