# 2020 TERYX® CAMO

## PARTS DIAGRAM

### Front Brake

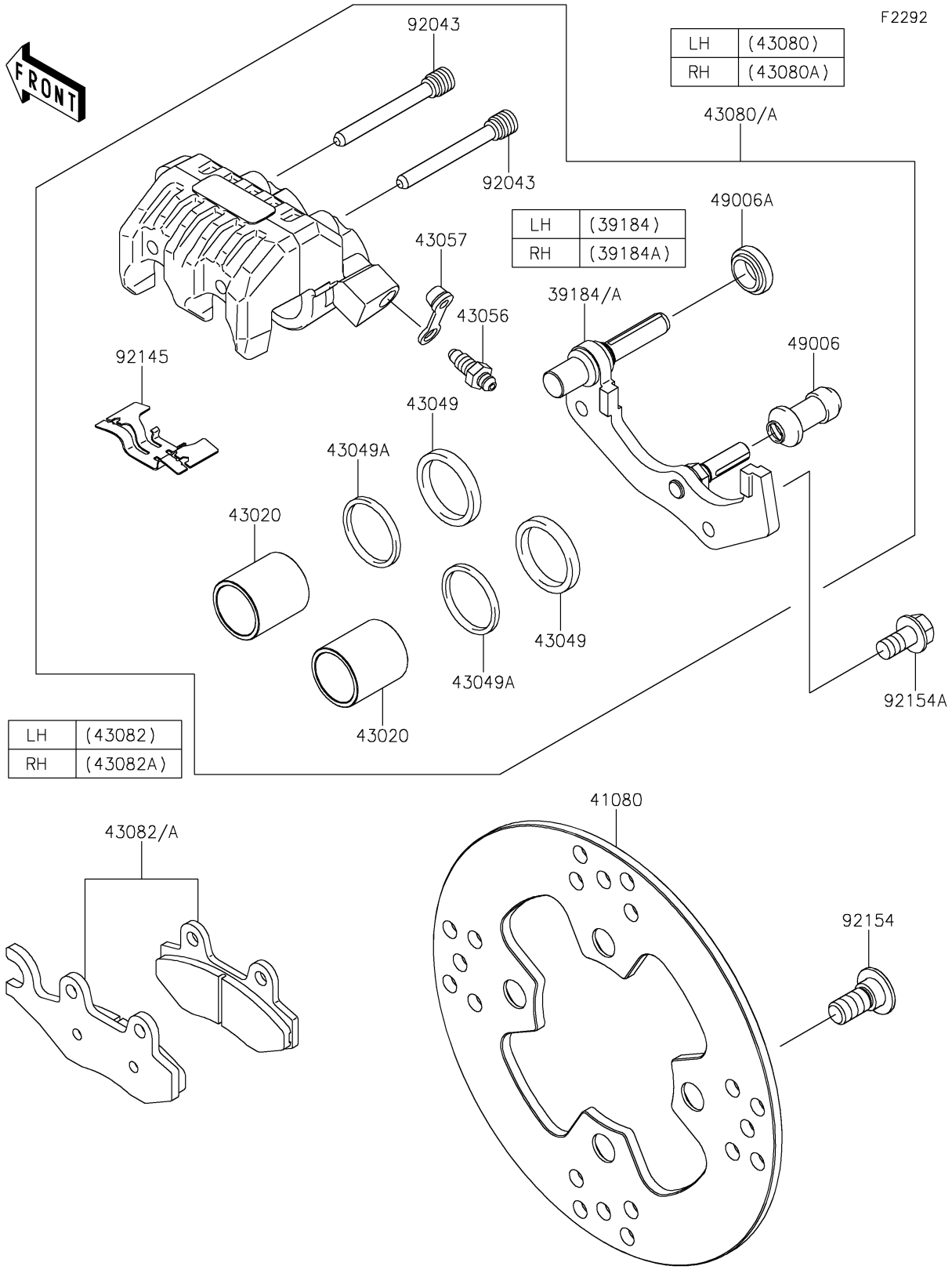


© 2026 Kawasaki Motors Corp., U.S.A.

# 2020 TERYX® CAMO

## PARTS LIST

### Front Brake

| ITEM NAME | PART NUMBER | QUANTITY |
|---|---|---|
| BRACKET-ASSY,LH (Ref # 39184) | 39184-0045 | 1 |
| BRACKET-ASSY,RH (Ref # 39184A) | 39184-0046 | 1 |
| DISC,FR,200MM (Ref # 41080) | 41080-0661 | 2 |
| PISTON-COMP-BRAKE (Ref # 43020) | 43020-0054 | 4 |
| PACKING (Ref # 43049) | 43049-0556 | 4 |
| PACKING (Ref # 43049A) | 43049-0557 | 4 |
| BREATHER-BRAKE (Ref # 43056) | 43056-0055 | 2 |
| CAP-BREATHER (Ref # 43057) | 43057-0552 | 2 |
| CALIPER-SUB-ASSY,LH (Ref # 43080) | 43080-0165 | 1 |
| CALIPER-SUB-ASSY,RH (Ref # 43080A) | 43080-0166 | 1 |
| PAD-ASSY-BRAKE,LH (Ref # 43082) | 43082-0126 | 1 |
| PAD-ASSY-BRAKE,RH (Ref # 43082A) | 43082-0127 | 1 |
| BOOT (Ref # 49006) | 49006-0565 | 2 |
| BOOT (Ref # 49006A) | 49006-0566 | 2 |
| PIN (Ref # 92043) | 92043-0184 | 4 |
| SPRING (Ref # 92145) | 92145-0705 | 2 |
| BOLT,SOCKET,10X23 (Ref # 92154) | 92154-0713 | 8 |
| BOLT,FLANGED,8X16 (Ref # 92154A) | 92154-1952 | 4 |

© 2026 Kawasaki Motors Corp., U.S.A.