2020 TERYX® CAMO

PARTS DIAGRAM

Wheels/Tires

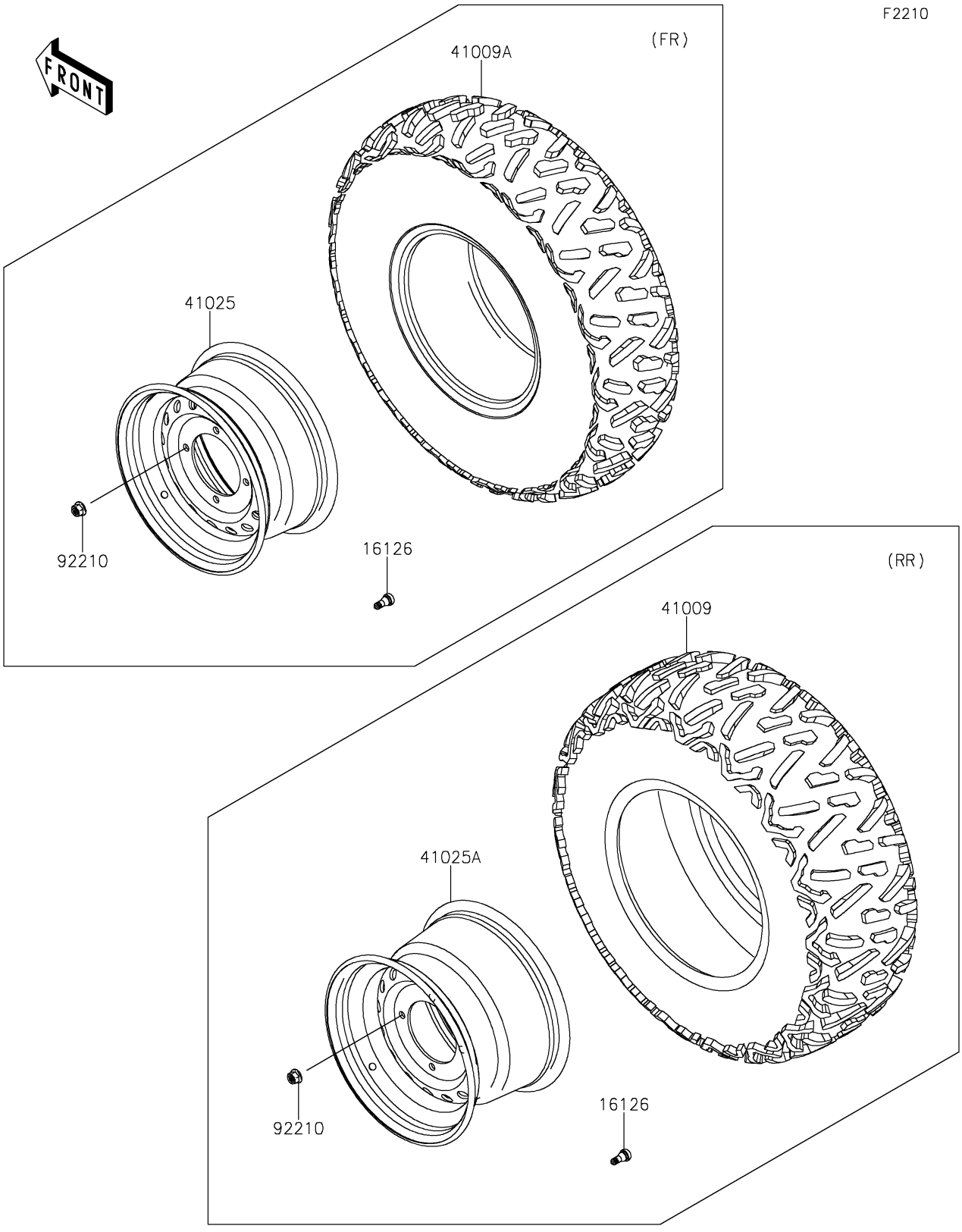

© 2026 Kawasaki Motors Corp., U.S.A.

2020 TERYX® CAMO

PARTS LIST

Wheels/Tires

ITEM NAME	PART NUMBER	QUANTITY
VALVE (Ref # 16126)	16126-4001	4
TIRE,RR,26X11.00-12,MU10 (Ref # 41009)	41009-0506	2
TIRE,FR,26X9.00R12 6PLY,BIGHORN2 (Ref # 41009A)	41009-0511	2
RIM,FR,12X6.0AT,F.S.BLACK (Ref # 41025)	41025-0310-397	2
RIM,RR,12X8.0AT,F.S.BLACK (Ref # 41025A)	41025-0311-397	2
NUT,12MM (Ref # 92210)	92210-0603	16

© 2026 Kawasaki Motors Corp., U.S.A.