2020 TERYX® CAMO

PARTS DIAGRAM

Engine Mount

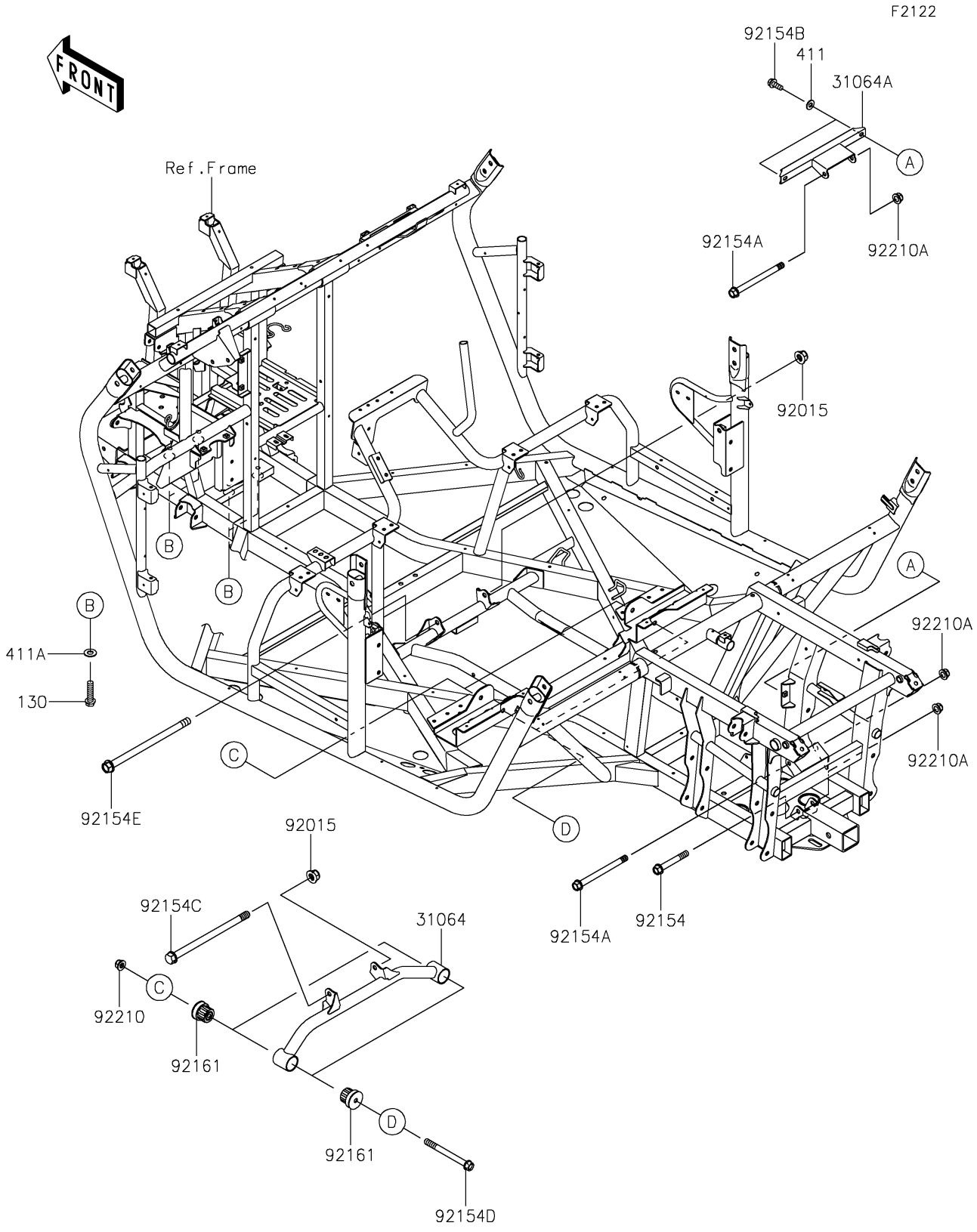

© 2026 Kawasaki Motors Corp., U.S.A.

2020 TERYX® CAMO

PARTS LIST

Engine Mount

ITEM NAME	PART NUMBER	QUANTITY
PIPE-COMP,RR FRAME (Ref # 31064)	31064-0621	1
PIPE-COMP,RR GEARCASE MOUNT (Ref # 31064A)	31064-0660	1
NUT,LOCK,FLANGED,12MM (Ref # 92015)	92015-1433	2
BOLT,FLANGED,10X70 (Ref # 92154)	92154-0894	1
BOLT,FLANGED,10X120 (Ref # 92154A)	92154-0895	2
BOLT,FLANGED,8X20 (Ref # 92154B)	92154-1130	2
BOLT,FLANGED,12X190 (Ref # 92154C)	92154-1131	1
BOLT,FLANGED,10X105 (Ref # 92154D)	92154-1132	2
BOLT,FLANGED,12X200 (Ref # 92154E)	92154-1133	1
DAMPER (Ref # 92161)	92161-0423	4
NUT,LOCK,FLANGED,10MM (Ref # 92210)	92210-0276	2
NUT,LOCK,FLANGED,10MM (Ref # 92210A)	92210-1080	3
BOLT-FLANGED,10X40 (Ref # 130)	130BA1040	4
WASHER-PLAIN,8MM (Ref # 411)	411AA0800	2
WASHER-PLAIN,10MM (Ref # 411A)	411AA1000	4

© 2026 Kawasaki Motors Corp., U.S.A.