2020 TERYX® CAMO

PARTS DIAGRAM

Starter Motor

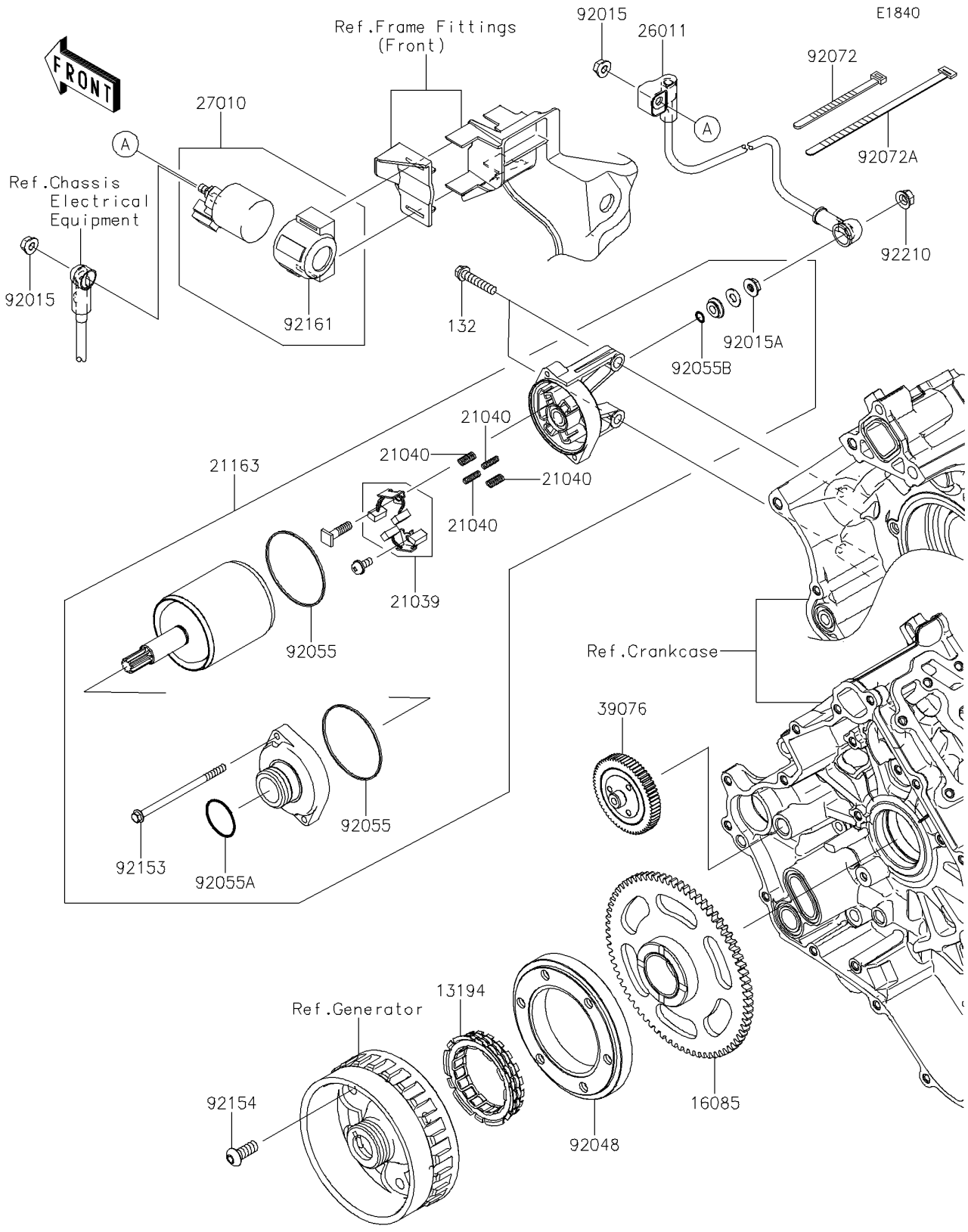

© 2026 Kawasaki Motors Corp., U.S.A.

2020 TERYX® CAMO

PARTS LIST

Starter Motor

ITEM NAME	PART NUMBER	QUANTITY
CLUTCH-ONEWAY (Ref # 13194)	13194-1094	1
GEAR,STARTER (Ref # 16085)	16085-0591	1
BRUSH,CARBON (Ref # 21039)	21039-0004	1
SPRING-BRUSH (Ref # 21040)	21040-0003	4
STARTER-ELECTRIC (Ref # 21163)	21163-0037	1
WIRE-LEAD (Ref # 26011)	26011-0901	1
SWITCH,MAGNETIC (Ref # 27010)	27010-0766	1
LIMITER,STARTER (Ref # 39076)	39076-0555	1
NUT,FLANGED,6MM (Ref # 92015)	92015-1367	2
NUT,STARTER MOTOR (Ref # 92015A)	92015-1476	1
RACE,ONEWAY CLUTCH (Ref # 92048)	92048-0553	1
RING-O (Ref # 92055)	92055-0136	2
RING-O (Ref # 92055A)	92055-1276	1
RING-O,4.5X2.0 (Ref # 92055B)	92055-1370	1
BAND,L=123 (Ref # 92072)	92072-030	1
BAND,L=186 (Ref # 92072A)	92072-056	1
BOLT (Ref # 92153)	92153-1850	2
BOLT,TORX,8X20 (Ref # 92154)	92154-0421	6
DAMPER,MAGNETIC SWITCH (Ref # 92161)	92161-1722	1
NUT,6MM (Ref # 92210)	92210-0188	1
BOLT-FLANGED-SMALL,6X30 (Ref # 132)	132BA0630	2

© 2026 Kawasaki Motors Corp., U.S.A.