2018 TERYX® CAMO

PARTS DIAGRAM

Gear Change Mechanism

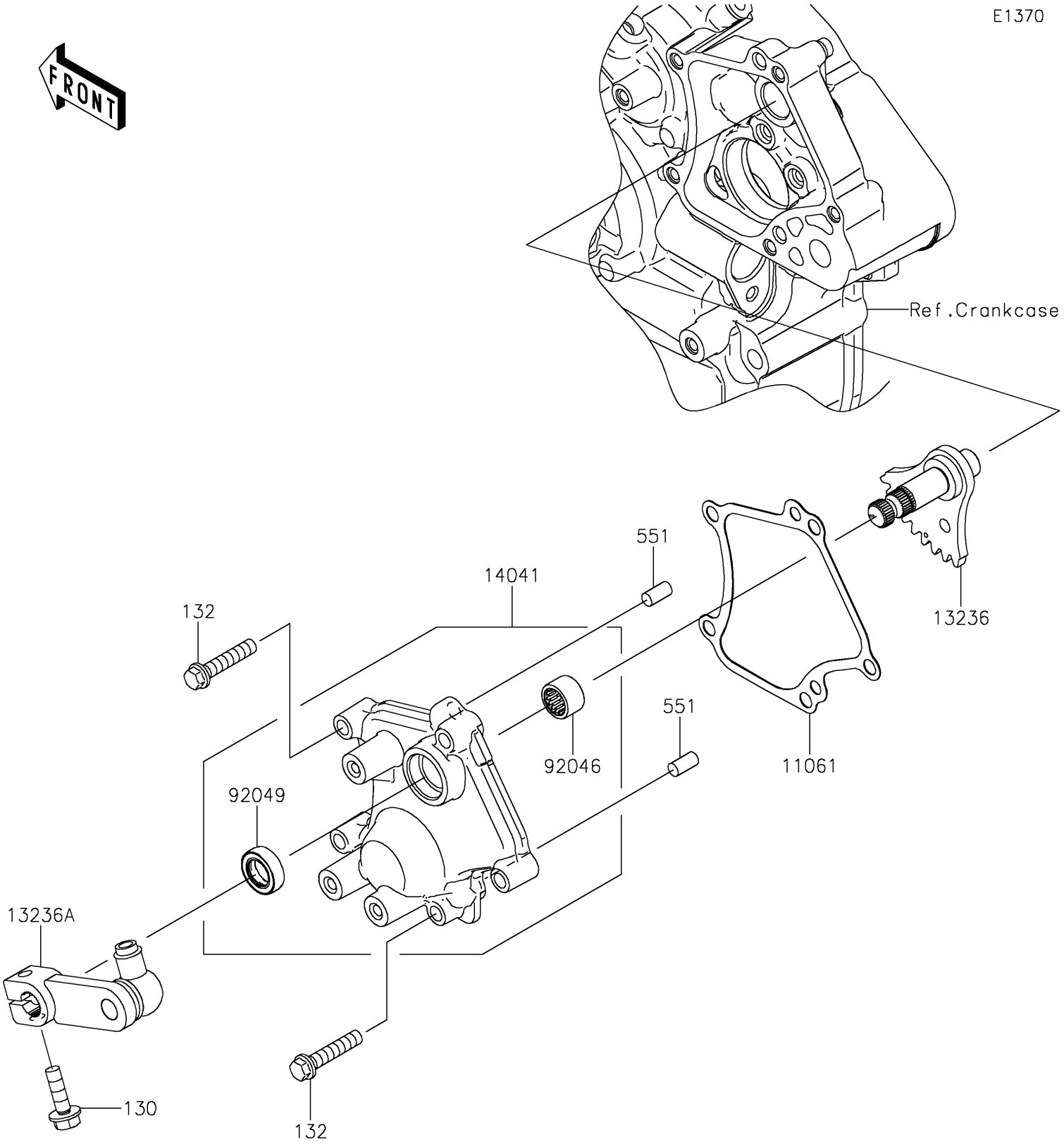

© 2026 Kawasaki Motors Corp., U.S.A.

2018 TERYX® CAMO

PARTS LIST

Gear Change Mechanism

ITEM NAME	PART NUMBER	QUANTITY
GASKET,DRUM COVER (Ref # 11061)	11061-0725	1
LEVER-COMP,CHANGE (Ref # 13236)	13236-0707	1
LEVER-COMP,CHANGE LEVER (Ref # 13236A)	13236-0708	1
COVER-COMP,CHANGE (Ref # 14041)	14041-0555	1
BEARING-NEEDLE,HK1210FM (Ref # 92046)	92046-0034	1
SEAL-OIL,CLUTCH RELEASE (Ref # 92049)	92049-1475	1
BOLT-FLANGED,6X20 (Ref # 130)	130CA0620	1
BOLT-FLANGED-SMALL,6X30 (Ref # 132)	132BA0630	5
PIN-DOWEL,6X12 (Ref # 551)	551A0612	2

© 2026 Kawasaki Motors Corp., U.S.A.