2017 TERYX®

PARTS DIAGRAM

Front Fender(s)

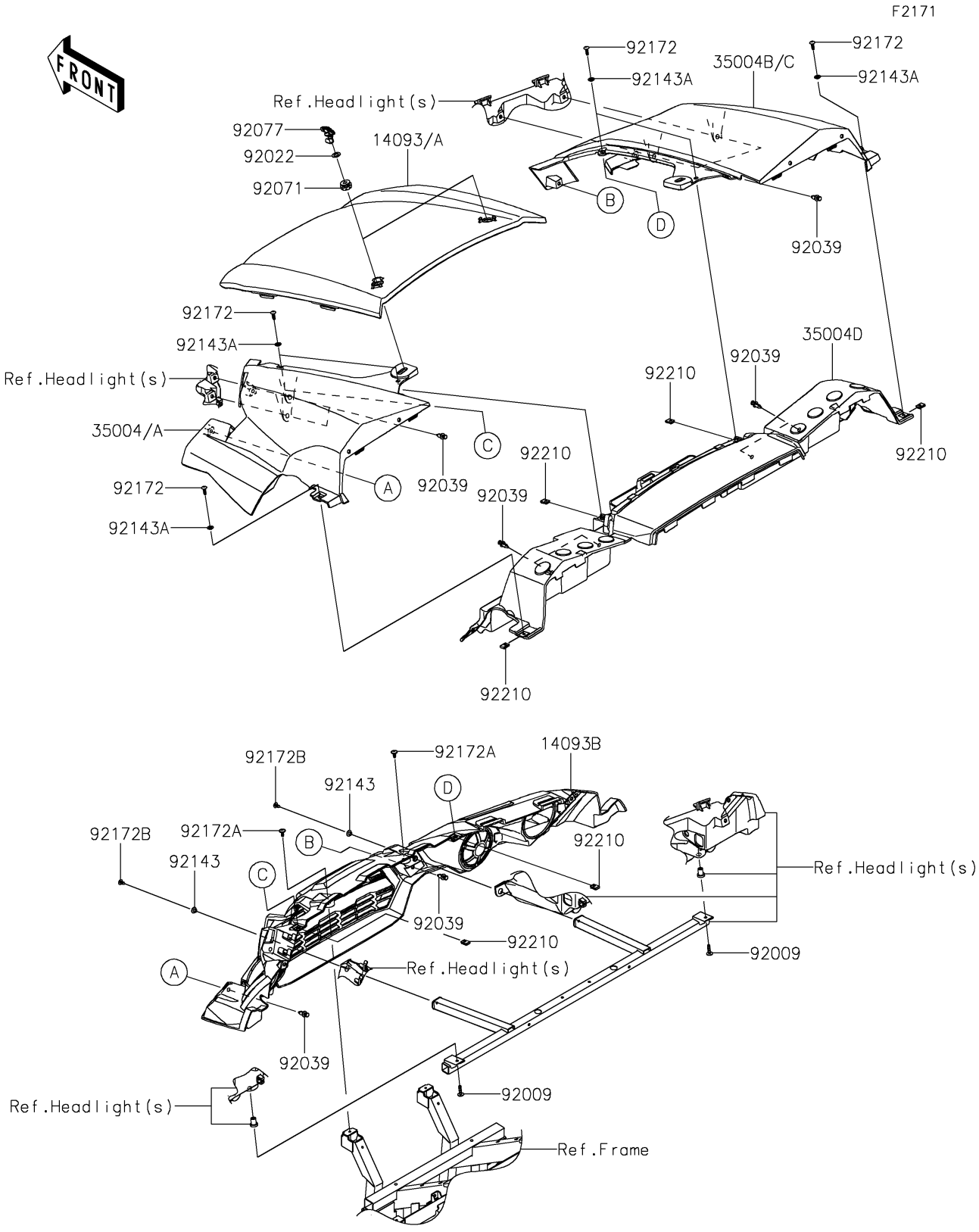

© 2026 Kawasaki Motors Corp., U.S.A.

2017 TERYX®

PARTS LIST

Front Fender(s)

ITEM NAME	PART NUMBER	QUANTITY
COVER,HOOD,B.WHITE (Ref # 14093)	14093-0205-266	1
COVER,HOOD,S.BLACK (Ref # 14093A)	14093-0205-839	1
COVER,FR GRILL (Ref # 14093B)	14093-0233	1
FENDER-FRONT,LH,B.WHITE (Ref # 35004)	35004-0343-266	1
FENDER-FRONT,LH,S.BLACK (Ref # 35004A)	35004-0343-839	1
FENDER-FRONT,RH,B.WHITE (Ref # 35004B)	35004-0344-266	1
FENDER-FRONT,RH,S.BLACK (Ref # 35004C)	35004-0344-839	1
FENDER-FRONT,RR (Ref # 35004D)	35004-0345	1
SCREW,6X25 (Ref # 92009)	92009-1465	2
WASHER,12.5X22X1.2 (Ref # 92022)	92022-072	2
RIVET (Ref # 92039)	92039-0776	12
GROMMET (Ref # 92071)	92071-0746	2
KNOB (Ref # 92077)	92077-0033	2
COLLAR (Ref # 92143)	92143-1057	2
COLLAR (Ref # 92143A)	92143-1087	6
SCREW,TAPPING,6X20 (Ref # 92172)	92172-0488	6
SCREW,6X16 (Ref # 92172A)	92172-0711	2
SCREW,TAPPING,6X16 (Ref # 92172B)	92172-0739	2
NUT,LEAF SPRING,6MM (Ref # 92210)	92210-0624	6

© 2026 Kawasaki Motors Corp., U.S.A.