2017 TERYX®

PARTS DIAGRAM

Clutch

E1350



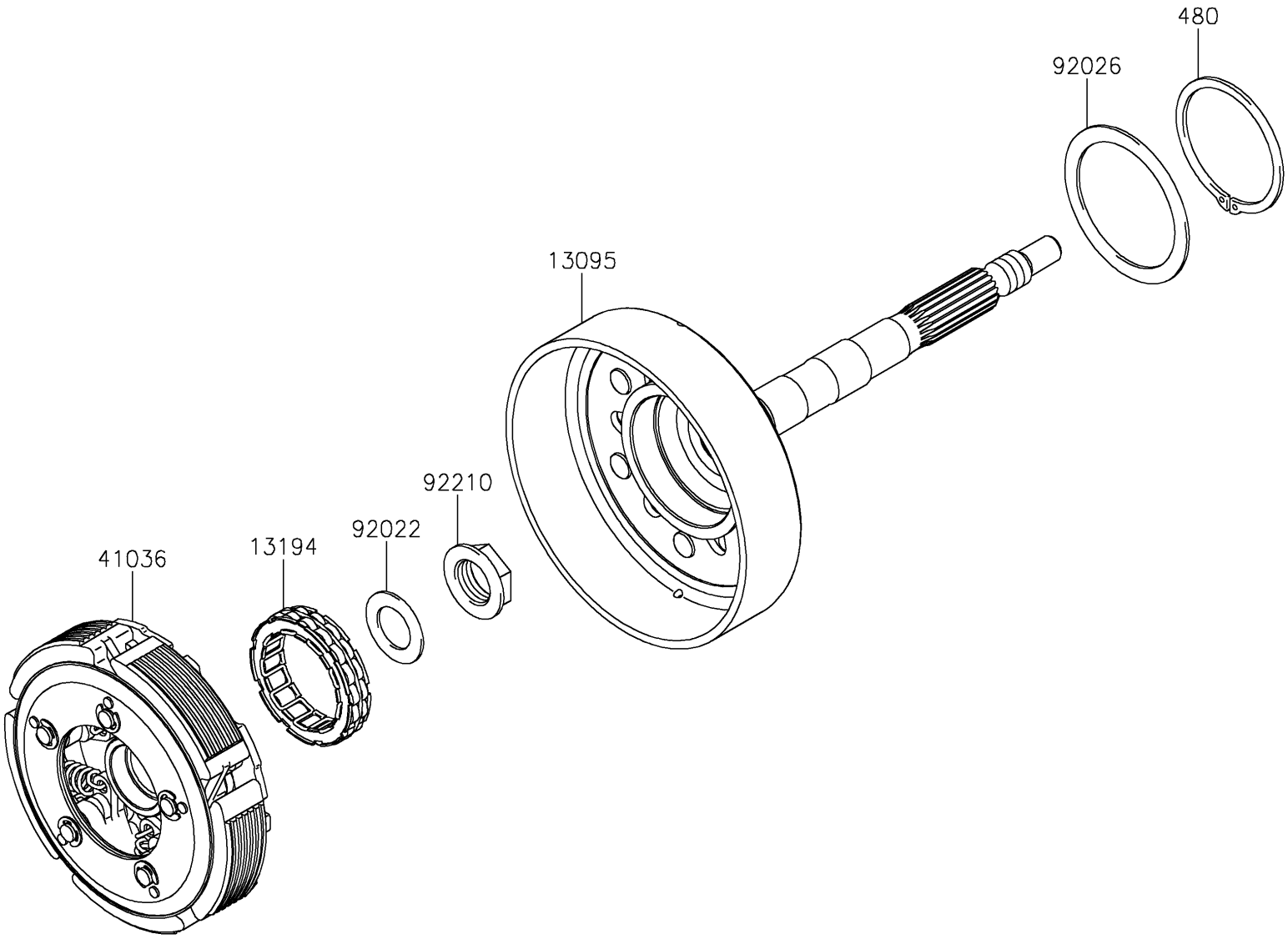

© 2026 Kawasaki Motors Corp., U.S.A.

2017 TERYX®

PARTS LIST

Clutch

ITEM NAME	PART NUMBER	QUANTITY

© 2026 Kawasaki Motors Corp., U.S.A.