2015 TERYX4™ LE

PARTS DIAGRAM

Rear Hubs/Brakes

Kawasaki
Let the Good Times Roll®

F2240

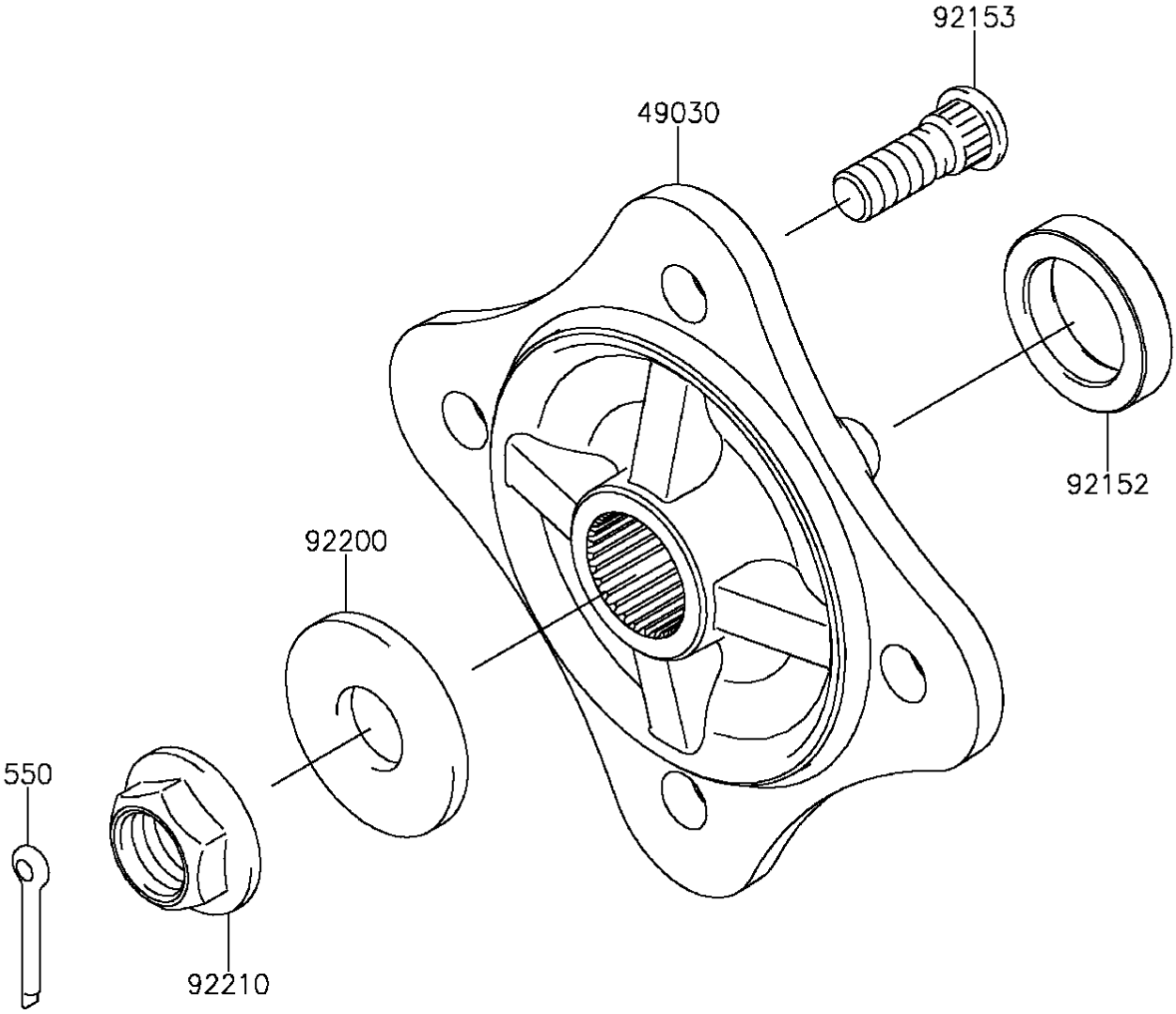

© 2026 Kawasaki Motors Corp., U.S.A.

2015 TERYX4™ LE

PARTS LIST

Rear Hubs/Brakes

ITEM NAME	PART NUMBER	QUANTITY
HUB,RR (Ref # 49030)	49030-0561	2
COLLAR,30.1X44X9 (Ref # 92152)	92152-1700	2
BOLT,12MM (Ref # 92153)	92153-1915	8
WASHER,20.3X52X4.5 (Ref # 92200)	92200-0130	2
NUT,FLANGED,20MM (Ref # 92210)	92210-2093	2
PIN-COTTER,4.0X30 (Ref # 550)	550AA4030	2

© 2026 Kawasaki Motors Corp., U.S.A.