2014 TERYX® LE

PARTS DIAGRAM

Generator

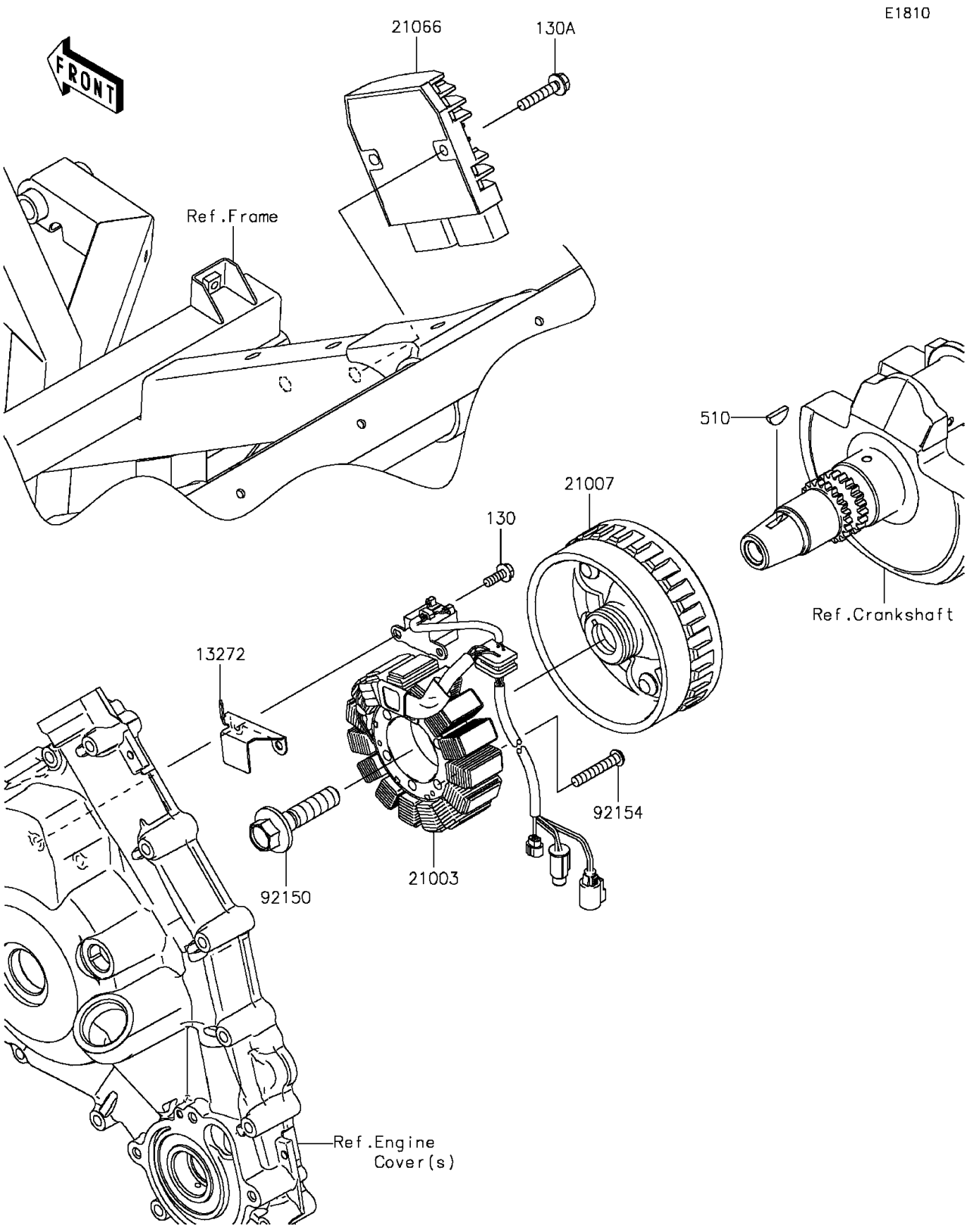

© 2026 Kawasaki Motors Corp., U.S.A.

2014 TERYX® LE

PARTS LIST

Generator

ITEM NAME	PART NUMBER	QUANTITY
PLATE (Ref # 13272)	13272-1222	1
STATOR (Ref # 21003)	21003-0132	1
ROTOR (Ref # 21007)	21007-0565	1
REGULATOR-VOLTAGE (Ref # 21066)	21066-0714	1
BOLT,12X50 (Ref # 92150)	92150-1708	1
BOLT,TORX,6X35 (Ref # 92154)	92154-1007	4
BOLT-FLANGED,5X14 (Ref # 130)	130BA0514	2
BOLT-FLANGED,6X30 (Ref # 130A)	130BA0630	2
KEY-WOODRUFF (Ref # 510)	510A4200	1

© 2026 Kawasaki Motors Corp., U.S.A.