2014 TERYX®

PARTS DIAGRAM

Decals

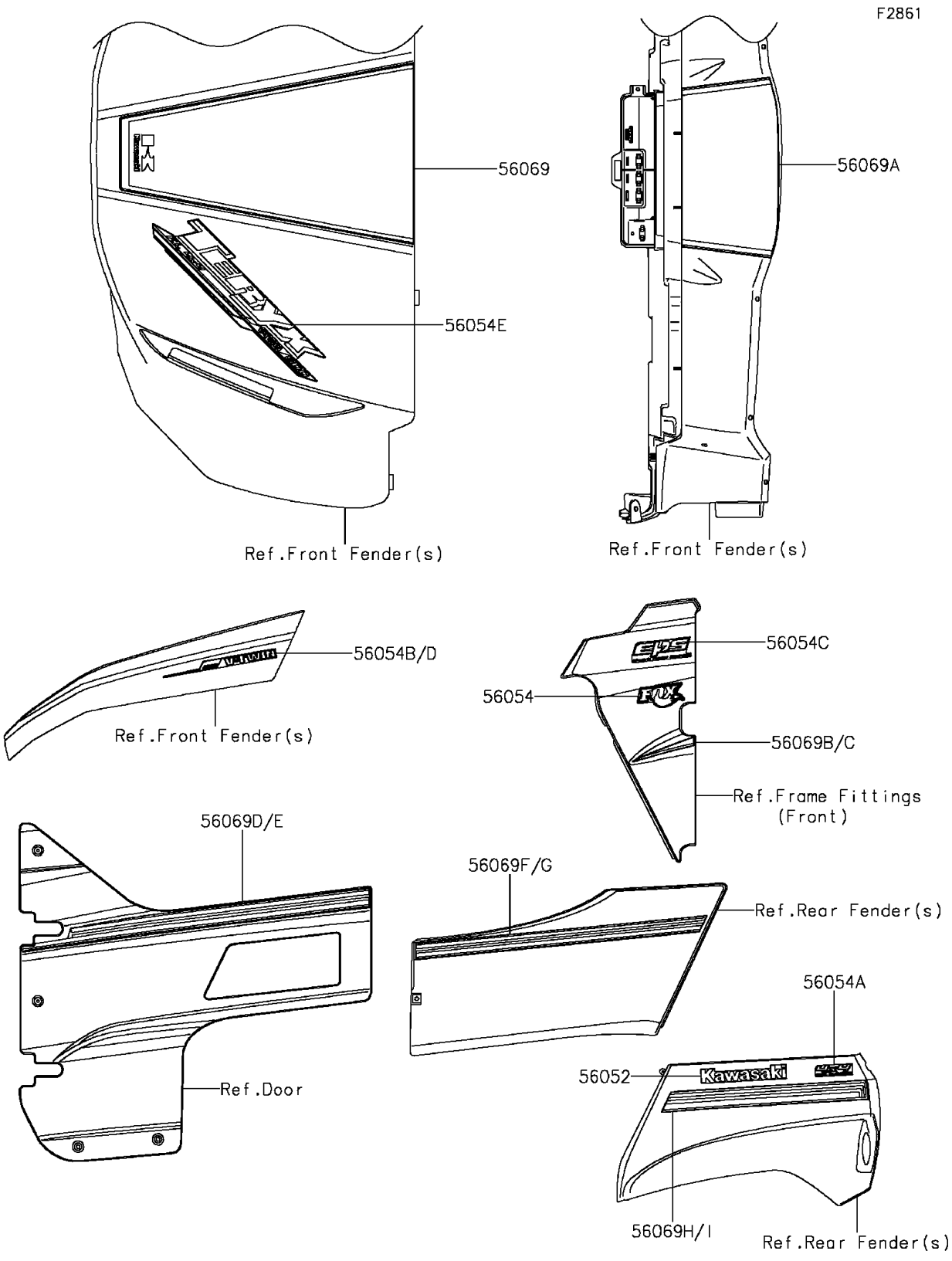

© 2026 Kawasaki Motors Corp., U.S.A.

2014 TERYX®

PARTS LIST

Decals

ITEM NAME	PART NUMBER	QUANTITY
MARK,KAWASAKI (Ref # 56052)	56052-0947	2
MARK,SIDE GUARD,FOX (Ref # 56054)	56054-1254	2
MARK,RR FENDER,4X4 (Ref # 56054A)	56054-1255	2
MARK,OVER FENDER,LH (Ref # 56054B)	56054-1257	1
MARK,SIDE GUARD,EPS (Ref # 56054C)	56054-1258	2
MARK,OVER FENDER,RH (Ref # 56054D)	56054-1271	1
MARK,FR FENDER,TERYX (Ref # 56054E)	56054-1290	1
PATTERN,FR FENDER (Ref # 56069)	56069-3966	1
PATTERN,FR FENDER,RR (Ref # 56069A)	56069-3967	1
PATTERN,SIDE GUARD,LH (Ref # 56069B)	56069-3968	1
PATTERN,SIDE GUARD,RH (Ref # 56069C)	56069-3969	1
PATTERN,DOOR COVER,FR,LH (Ref # 56069D)	56069-3970	1
PATTERN,DOOR COVER,FR,RH (Ref # 56069E)	56069-3971	1
PATTERN,RR FENDER,FR,LH (Ref # 56069F)	56069-4114	1
PATTERN,RR FENDER,FR,RH (Ref # 56069G)	56069-4115	1
PATTERN,RR FENDER,RR,LH (Ref # 56069H)	56069-4116	1
PATTERN,RR FENDER,RR,RH (Ref # 56069I)	56069-4117	1

© 2026 Kawasaki Motors Corp., U.S.A.