# 2014 TERYX4™

## PARTS DIAGRAM

### Frame

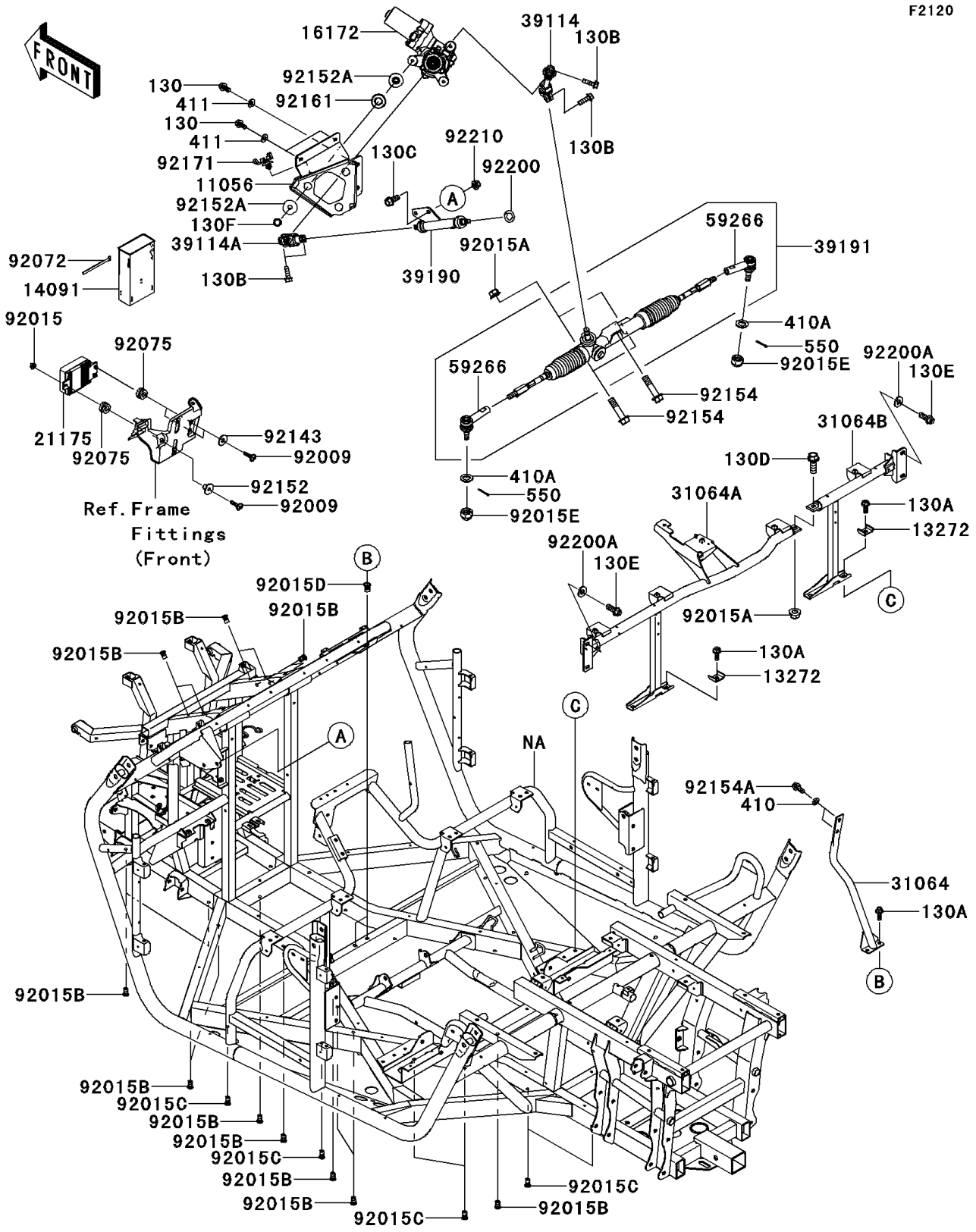


© 2026 Kawasaki Motors Corp., U.S.A.

# 2014 TERYX4™

## PARTS LIST

### Frame

| ITEM NAME | PART NUMBER | QUANTITY |
|---|---|---|

© 2026 Kawasaki Motors Corp., U.S.A.