2025 TERYX4™ S CAMO

PARTS DIAGRAM

Carrier(s)

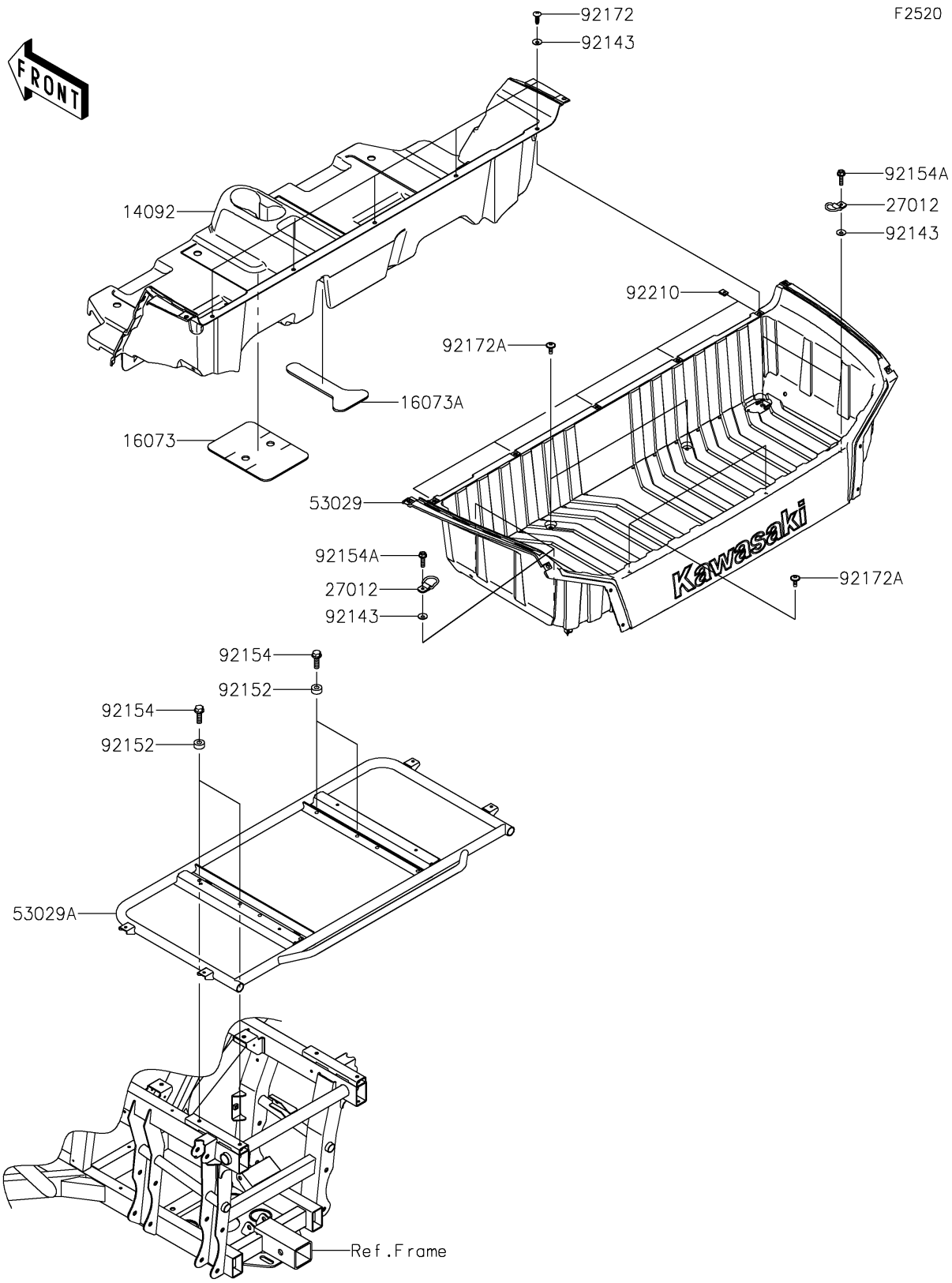

© 2026 Kawasaki Motors Corp., U.S.A.

2025 TERYX4™ S CAMO

PARTS LIST

Carrier(s)

ITEM NAME	PART NUMBER	QUANTITY
COVER,RR CONSOLE (Ref # 14092)	14092-1057	1
INSULATOR,CENTER CONSOLE (Ref # 16073)	16073-0803	1
INSULATOR (Ref # 16073A)	16073-0842	1
HOOK (Ref # 27012)	27012-0783	4
CARRIER (Ref # 53029)	53029-0309	1
CARRIER (Ref # 53029A)	53029-0352	1
COLLAR (Ref # 92143)	92143-1087	9
COLLAR,8.2X18X8 (Ref # 92152)	92152-1553	4
BOLT,FLANGED,8X25 (Ref # 92154)	92154-1302	4
BOLT,FLANGED,6X22 (Ref # 92154A)	92154-1356	4
SCREW,TAPPING,6X20 (Ref # 92172)	92172-0488	5
SCREW,6X16 (Ref # 92172A)	92172-0711	4
NUT,LEAF SPRING,6MM (Ref # 92210)	92210-0624	5

© 2026 Kawasaki Motors Corp., U.S.A.