2025 TERYX4™ S CAMO

PARTS DIAGRAM

Drive Shaft-Propeller

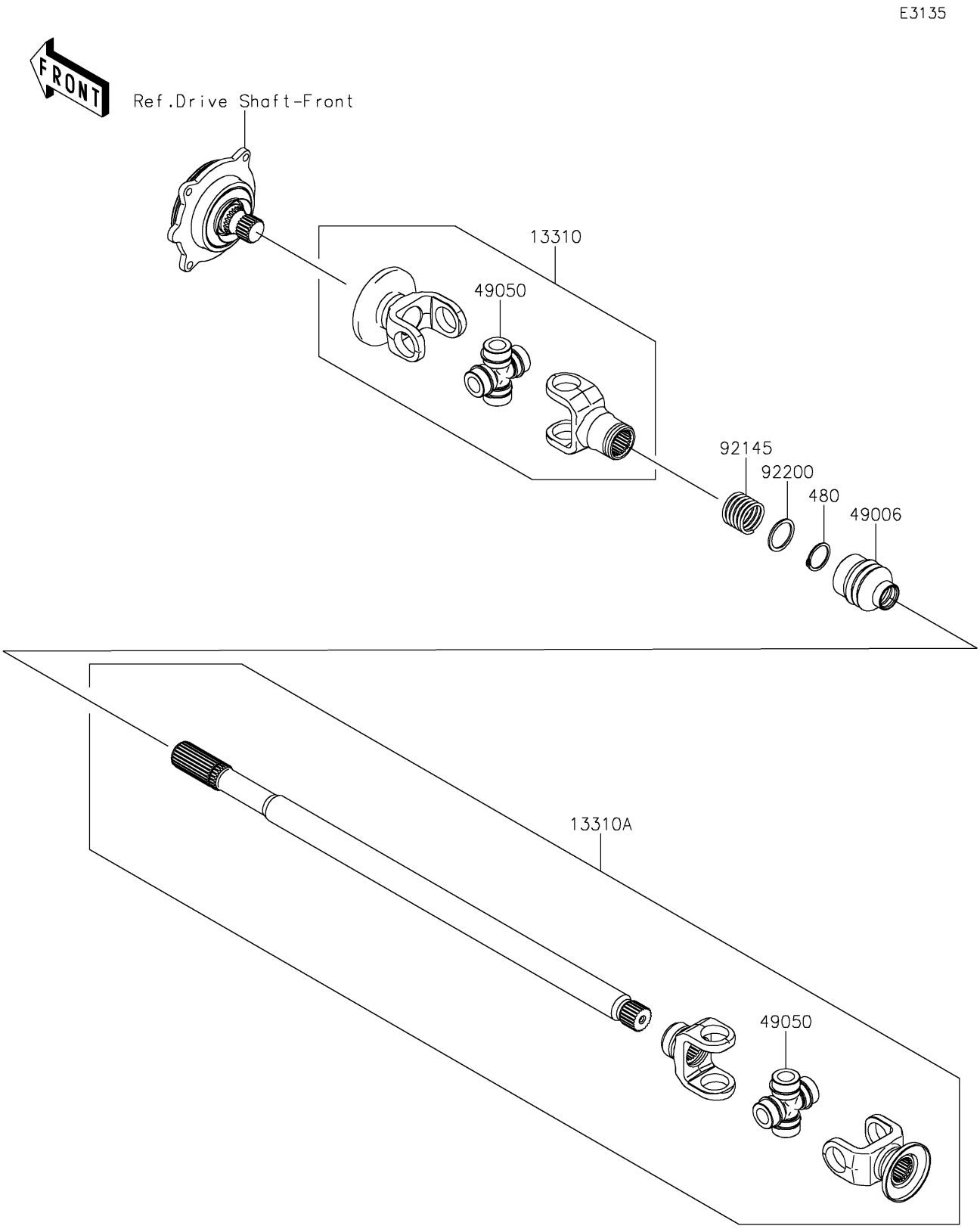

© 2026 Kawasaki Motors Corp., U.S.A.

2025 TERYX4™ S CAMO

PARTS LIST

Drive Shaft-Propeller

ITEM NAME	PART NUMBER	QUANTITY
SHAFT-ASSY,FRONT GEAR SIDE (Ref # 13310)	13310-0031	1
SHAFT-ASSY,FRONT ENG SIDE (Ref # 13310A)	13310-0032	1
BOOT,GEAR ASSY SIDE (Ref # 49006)	49006-0108	1
SPIDER (Ref # 49050)	49050-0034	2
SPRING (Ref # 92145)	92145-0823	1
WASHER,25X31X1.5 (Ref # 92200)	92200-0600	1
CIRCLIP-TYPE-C,24MM (Ref # 480)	480J2400	1

© 2026 Kawasaki Motors Corp., U.S.A.