2023 Teryx4

PARTS DIAGRAM

Fuel Tank

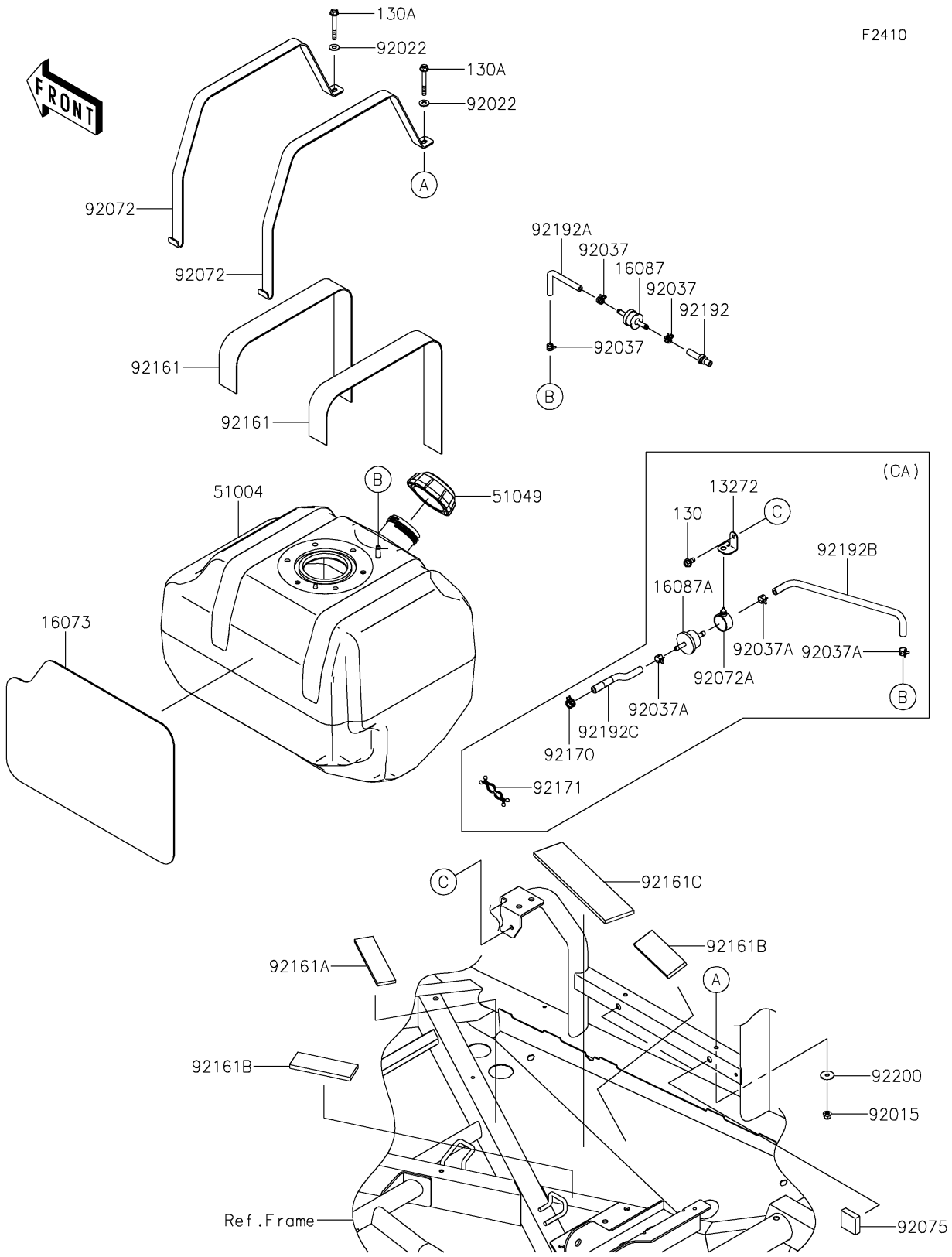

© 2026 Kawasaki Motors Corp., U.S.A.

2023 Teryx4

PARTS LIST

Fuel Tank

ITEM NAME	PART NUMBER	QUANTITY
PLATE (Ref # 13272)	13272-2276	1
INSULATOR (Ref # 16073)	16073-0924	1
VALVE-CHECK (Ref # 16087)	16087-0008	1
VALVE-CHECK (Ref # 16087A)	16087-0011	1
TANK-FUEL (Ref # 51004)	51004-0002	1
CAP-TANK,FUEL (Ref # 51049)	51049-0718	1
NUT,LOCK,FLANGED,6MM (Ref # 92015)	92015-1339	2
WASHER,7X16X1.2 (Ref # 92022)	92022-1344	2
CLAMP,TUBE (Ref # 92037)	92037-1461	3
CLAMP (Ref # 92037A)	92037-2113	3
BAND,FUEL TANK (Ref # 92072)	92072-0704	2
BAND (Ref # 92072A)	92072-0852	1
DAMPER (Ref # 92075)	92075-1882	2
DAMPER,FUEL TANK (Ref # 92161)	92161-0794	2
DAMPER,31.1X130X5 (Ref # 92161A)	92161-0936	1
DAMPER,38X105X7 (Ref # 92161B)	92161-0948	2
DAMPER,55X225X6.35 (Ref # 92161C)	92161-1811	1
CLAMP (Ref # 92170)	92170-2082	1
CLAMP (Ref # 92171)	92171-0476	1
TUBE,FRAME PIPE-CHECK VALVE (Ref # 92192)	92192-0068	1
TUBE,VENT (Ref # 92192A)	92192-0949	1
TUBE,5X10.4X40/240 (Ref # 92192B)	92192-1735	1
TUBE,FILTER-CHECK VALVE (Ref # 92192C)	92192-2259	1
WASHER,6.5X22X1.6 (Ref # 92200)	92200-1087	2
BOLT-FLANGED,6X12 (Ref # 130)	130BA0612	1
BOLT-FLANGED,6X50 (Ref # 130A)	130BA0650	2

© 2026 Kawasaki Motors Corp., U.S.A.