2023 TERYX4™ S LE

PARTS DIAGRAM

Front Suspension

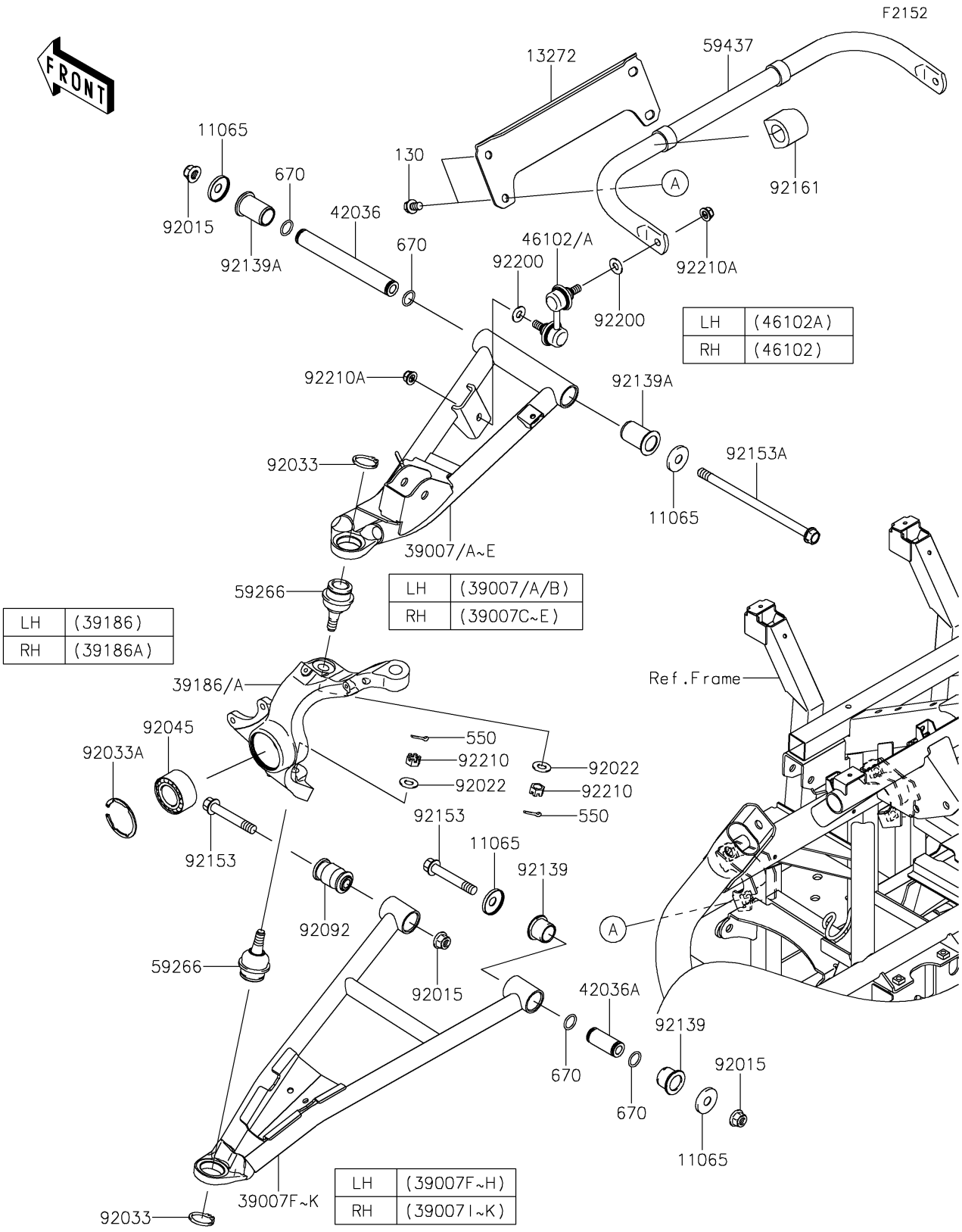

© 2026 Kawasaki Motors Corp., U.S.A.

2023 TERYX4™ S LE

PARTS LIST

Front Suspension

ITEM NAME	PART NUMBER	QUANTITY
CAP (Ref # 11065)	11065-0253	8
PLATE (Ref # 13272)	13272-1650	1
ARM-SUSP,FR,UPP,LH,P.C.L.GREEN (Ref # 39007)	39007-0445-42Q	1
ARM-SUSP,FR,UPP,LH,P.P.N.YEL (Ref # 39007B)	39007-0445-66P	1
ARM-SUSP,FR,UPP,RH,P.C.L.GREEN (Ref # 39007C)	39007-0446-42Q	1
ARM-SUSP,FR,UPP,RH,P.P.N.YEL (Ref # 39007E)	39007-0446-66P	1
ARM-SUSP,FR,LWR,LH,P.C.L.GREEN (Ref # 39007F)	39007-0447-42Q	1
ARM-SUSP,FR,LWR,LH,P.P.N.YEL (Ref # 39007H)	39007-0447-66P	1
ARM-SUSP,FR,LWR,RH,P.C.L.GREEN (Ref # 39007I)	39007-0448-42Q	1
ARM-SUSP,FR,LWR,RH,P.P.N.YEL (Ref # 39007K)	39007-0448-66P	1
KNUCKLE,FR,LH (Ref # 39186)	39186-0311	1
KNUCKLE,FR,RH (Ref # 39186A)	39186-0312	1
SLEEVE (Ref # 42036)	42036-0061	2
SLEEVE (Ref # 42036A)	42036-0062	2
ROD,STABILIZER,RH (Ref # 46102)	46102-0100	1
ROD,STABILIZER,LH (Ref # 46102A)	46102-0101	1
JOINT-BALL (Ref # 59266)	59266-0711	4
STABILIZER,FR (Ref # 59437)	59437-0010	1
NUT,LOCK,FLANGED,12MM (Ref # 92015)	92015-1433	6
WASHER (Ref # 92022)	92022-1831	4
RING-SNAP,C-TYPE,32MM (Ref # 92033)	92033-1262	4
RING-SNAP,55MM (Ref # 92033A)	92033-1274	2
BEARING-BALL,30X55X32 (Ref # 92045)	92045-0800	2
BUSHING-RUBBER (Ref # 92092)	92092-0555	2
BUSHING (Ref # 92139)	92139-0231	4
BUSHING,22.4X28.2X46 (Ref # 92139A)	92139-0806	4
BOLT,FLANGED,12X76.5 (Ref # 92153)	92153-1733	4
BOLT,FLANGED,12X213 (Ref # 92153A)	92153-1958	2
DAMPER (Ref # 92161)	92161-1508	2

© 2026 Kawasaki Motors Corp., U.S.A.

2023 TERYX4™ S LE

PARTS LIST

Front Suspension

ITEM NAME	PART NUMBER	QUANTITY
WASHER,10.3X23X1.6 (Ref # 92200)	92200-2009	4
NUT,CASTLE,12MM (Ref # 92210)	92210-0395	4
NUT,LOCK,FLANGED,10MM (Ref # 92210A)	92210-1080	4
BOLT-FLANGED,10X16 (Ref # 130)	130CA1016	4
PIN-COTTER,3.0X25 (Ref # 550)	550AA3025	4
O RING,18MM (Ref # 670)	670B2018	8

© 2026 Kawasaki Motors Corp., U.S.A.