2023 Teryx4

PARTS DIAGRAM

Engine Cover(s)

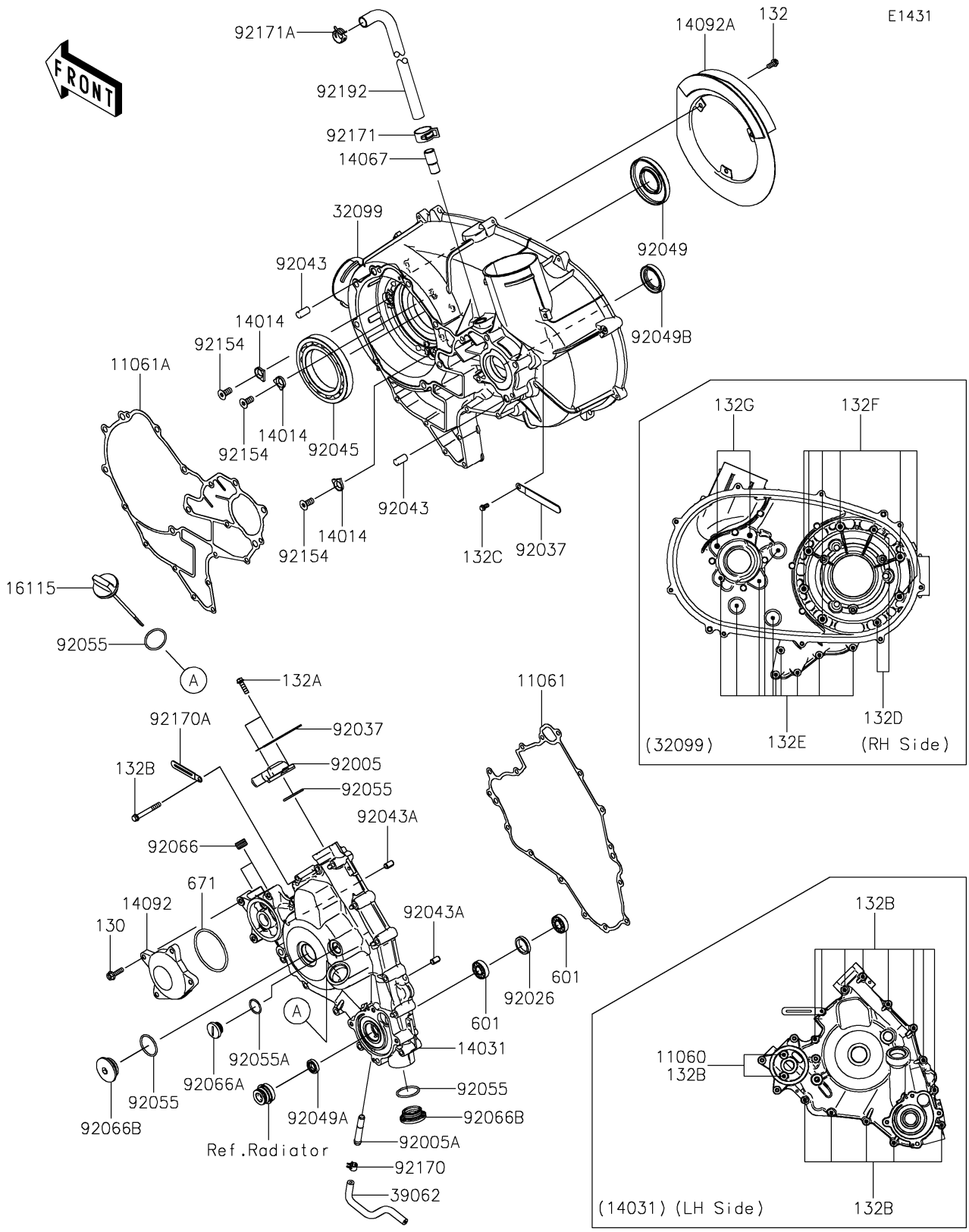

© 2026 Kawasaki Motors Corp., U.S.A.

2023 Teryx4

PARTS LIST

Engine Cover(s)

Kawasaki
Let the Good Times Roll®

ITEM NAME	PART NUMBER	QUANTITY
GASKET,6.2X12X0.3 (Ref # 11060)	11060-1994	2
GASKET,GENERATOR COVER (Ref # 11061)	11061-0728	1
GASKET,CVT CASE (Ref # 11061A)	11061-0729	1
PLATE-POSITION (Ref # 14014)	14014-0556	3
COVER-GENERATOR (Ref # 14031)	14031-0589	1
FITTING,BREATHER (Ref # 14067)	14067-006	1
COVER,OIL COOLER (Ref # 14092)	14092-0877	1
COVER (Ref # 14092A)	14092-1051	1
CAP-OIL FILLER (Ref # 16115)	16115-0705	1
CASE,CVT (Ref # 32099)	32099-0788	1
HOSE-COOLING,DRAIN (Ref # 39062)	39062-0598	1
FITTING (Ref # 92005)	92005-0712	1
FITTING (Ref # 92005A)	92005-1264	1
SPACER,22X28X5 (Ref # 92026)	92026-0711	1
CLAMP (Ref # 92037)	92037-1993	2
PIN,10X20 (Ref # 92043)	92043-0142	2
PIN,6.2X8X14 (Ref # 92043A)	92043-1263	2
BEARING-BALL,16014CS45 (Ref # 92045)	92045-0709	1
SEAL-OIL,35X77X9 (Ref # 92049)	92049-0713	1
SEAL-OIL,12X22X5 (Ref # 92049A)	92049-0783	1
SEAL-OIL,HTC 30X45X8 (Ref # 92049B)	92049-1575	1
RING-O,31.2X2.4 (Ref # 92055)	92055-0724	4
RING-O,20X2 (Ref # 92055A)	92055-1146	1
PLUG,PT3/8X10 (Ref # 92066)	92066-0003	2
PLUG,COVER (Ref # 92066A)	92066-0011	1
PLUG (Ref # 92066B)	92066-0712	2
BOLT,FLAT,8X13.6 (Ref # 92154)	92154-0978	3
CLAMP (Ref # 92170)	92170-1493	1
CLAMP (Ref # 92170A)	92170-1514	1

© 2026 Kawasaki Motors Corp., U.S.A.

2023 Teryx4

PARTS LIST

Engine Cover(s)

ITEM NAME	PART NUMBER	QUANTITY
CLAMP (Ref # 92171)	92171-0329	1
CLAMP (Ref # 92171A)	92171-1277	1
TUBE,BREATHER (Ref # 92192)	92192-0945	1
BOLT-FLANGED,6X22 (Ref # 130)	130CA0622	4
BOLT-FLANGED-SMALL,6X12 (Ref # 132)	132BA0612	3
BOLT-FLANGED-SMALL,6X20 (Ref # 132A)	132BA0620	2
BOLT-FLANGED-SMALL,6X50 (Ref # 132B)	132BA0650	15
BOLT-FLANGED-SMALL,6X12 (Ref # 132C)	132BD0612	1
BOLT-FLANGED-SMALL,6X30 (Ref # 132D)	132BD0630	2
BOLT-FLANGED-SMALL,6X45 (Ref # 132E)	132BD0645	10
BOLT-FLANGED-SMALL,8X35 (Ref # 132F)	132BD0835	6
BOLT-FLANGED-SMALL,8X50 (Ref # 132G)	132BD0850	2
BEARING-BALL (Ref # 601)	601A6001	2
O RING,65MM (Ref # 671)	671B2565	1

© 2026 Kawasaki Motors Corp., U.S.A.