2023 Teryx4

PARTS DIAGRAM

Air Cleaner

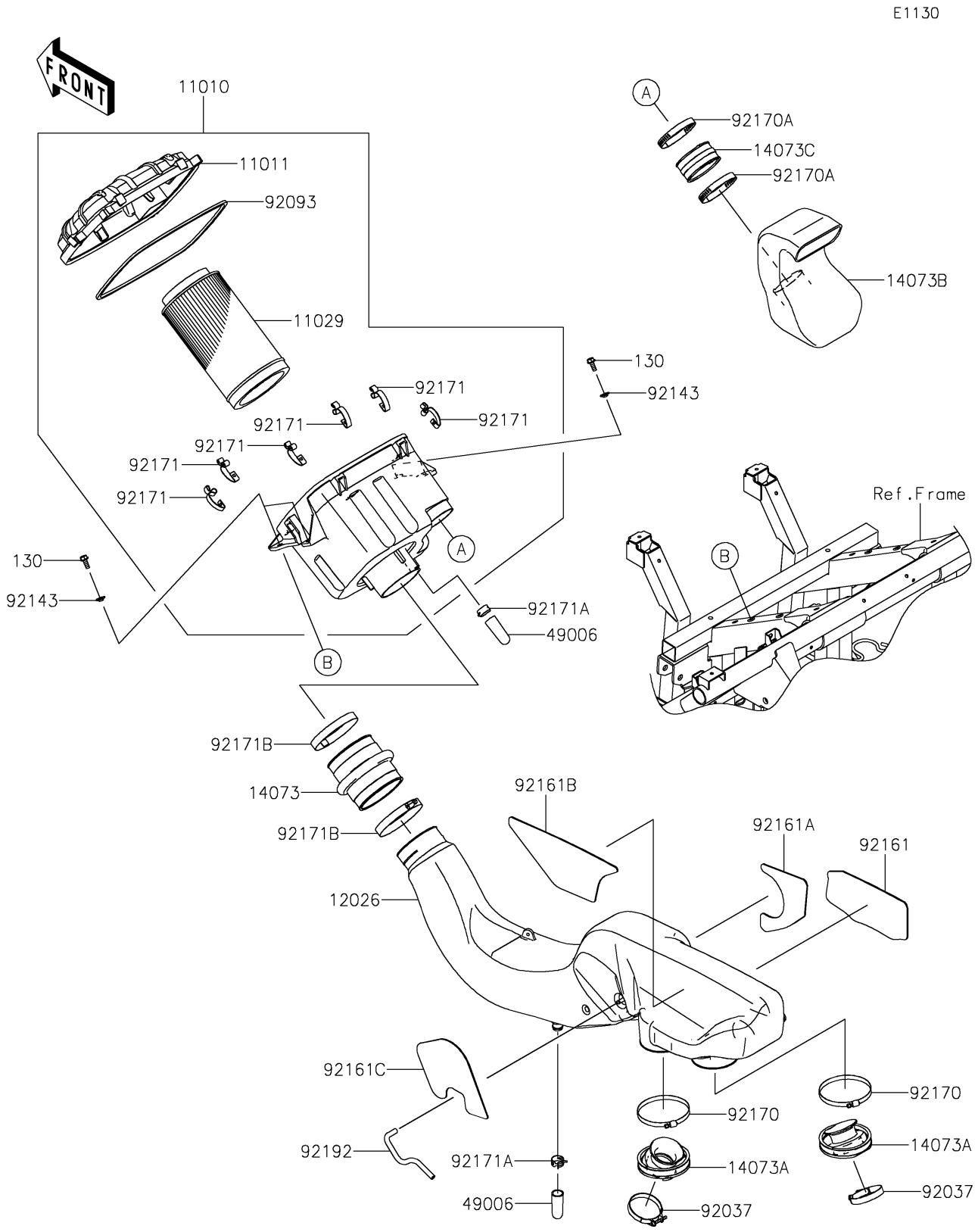

© 2026 Kawasaki Motors Corp., U.S.A.

2023 Teryx4

PARTS LIST

Air Cleaner

ITEM NAME	PART NUMBER	QUANTITY
FILTER-ASSY-AIR (Ref # 11010)	11010-1873	1
CASE-AIR FILTER (Ref # 11011)	11011-0784	1
ELEMENT-ASSY-AIR FILTER (Ref # 11029)	11029-0740	1
CHAMBER (Ref # 12026)	12026-0016	1
DUCT,JOINT,A/C SIDE (Ref # 14073)	14073-0757	1
DUCT,THROTTLE-CHAMBER (Ref # 14073A)	14073-0758	2
DUCT,INTAKE (Ref # 14073B)	14073-0767	1
DUCT,JOINT (Ref # 14073C)	14073-1775	1
BOOT (Ref # 49006)	49006-1351	2
CLAMP (Ref # 92037)	92037-1523	2
SEAL (Ref # 92093)	92093-0585	1
COLLAR (Ref # 92143)	92143-1087	4
DAMPER,CHAMBER,RH,RR (Ref # 92161)	92161-1518	1
DAMPER,CHAMBER,RH,FR (Ref # 92161A)	92161-1519	1
DAMPER,CHAMBER,LH,RR (Ref # 92161B)	92161-1520	1
DAMPER,CHAMBER,LH,FR (Ref # 92161C)	92161-1521	1
CLAMP (Ref # 92170)	92170-1676	2
CLAMP (Ref # 92170A)	92170-1764	2
CLAMP (Ref # 92171)	92171-0225	6
CLAMP (Ref # 92171A)	92171-1277	2
CLAMP (Ref # 92171B)	92171-3716	2
TUBE,4X8X143 (Ref # 92192)	92192-1230	1
BOLT-FLANGED,6X16 (Ref # 130)	130AA0616	4

© 2026 Kawasaki Motors Corp., U.S.A.