2025 TERYX4™

PARTS DIAGRAM

Brake Pedal/Throttle Lever

F2260

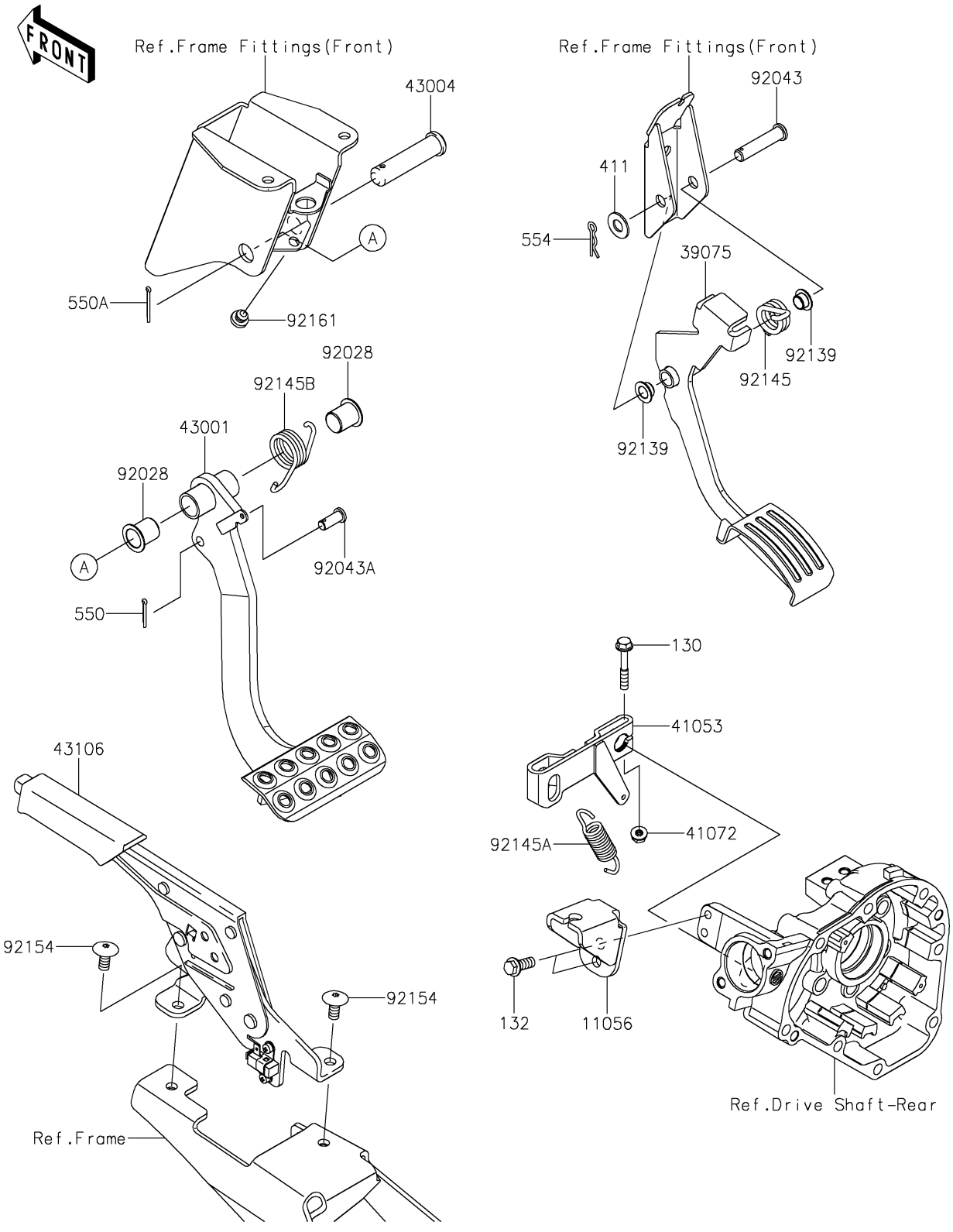

© 2026 Kawasaki Motors Corp., U.S.A.

2025 TERYX4™

PARTS LIST

Brake Pedal/Throttle Lever

Kawasaki
Let the Good Times Roll®

ITEM NAME	PART NUMBER	QUANTITY

© 2026 Kawasaki Motors Corp., U.S.A.