2024 Teryx4™

PARTS DIAGRAM

Brake Pedal/Throttle Lever

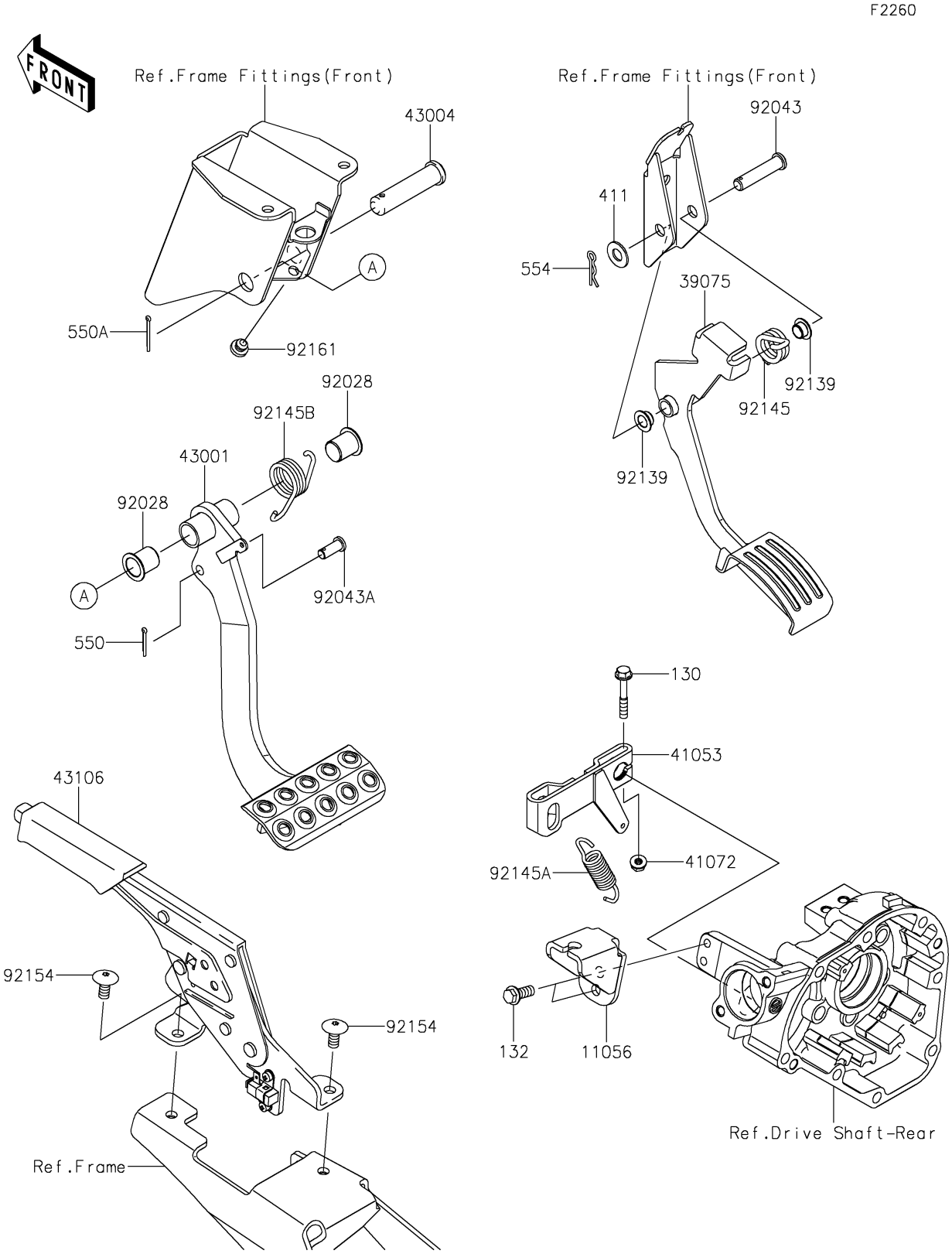

© 2026 Kawasaki Motors Corp., U.S.A.

2024 Teryx4™

PARTS LIST

Brake Pedal/Throttle Lever

Kawasaki
Let the Good Times Roll®

ITEM NAME	PART NUMBER	QUANTITY
BRACKET (Ref # 11056)	11056-2267	1
LEVER-THROTTLE (Ref # 39075)	39075-0019	1
LEVER-BRAKE CAM (Ref # 41053)	41053-0023	1
NUT,6MM (Ref # 41072)	41072-007	1
LEVER-BRAKE,PEDAL (Ref # 43001)	43001-0739	1
SHAFT-BRAKE (Ref # 43004)	43004-1128	1
LEVER-ASSY-PARKING BRAKE (Ref # 43106)	43106-0009	1
BUSHING (Ref # 92028)	92028-1571	2
PIN,10X42.5 (Ref # 92043)	92043-0707	1
PIN (Ref # 92043A)	92043-1039	1
BUSHING (Ref # 92139)	92139-0230	2
SPRING,THROTTLE (Ref # 92145)	92145-0831	1
SPRING,BRAKE CAM LEVER (Ref # 92145A)	92145-0880	1
SPRING,BRAKE PEDAL RETURN (Ref # 92145B)	92145-1615	1
BOLT-FLANGED,8X18 (Ref # 92154)	92154-2692	2
DAMPER (Ref # 92161)	92161-1084	1
BOLT-FLANGED,6X40 (Ref # 130)	130CA0640	1
BOLT-FLANGED-SMALL,8X20 (Ref # 132)	132BA0820	2
WASHER-PLAIN,10MM (Ref # 411)	411AA1000	1
PIN-COTTER,2.5X18 (Ref # 550)	550AA2518	1
PIN-COTTER,2.5X25 (Ref # 550A)	550AA2525	1
PIN-SNAP,10MM (Ref # 554)	554DA1000	1

© 2026 Kawasaki Motors Corp., U.S.A.