2025 TERYX4™

PARTS DIAGRAM

Generator

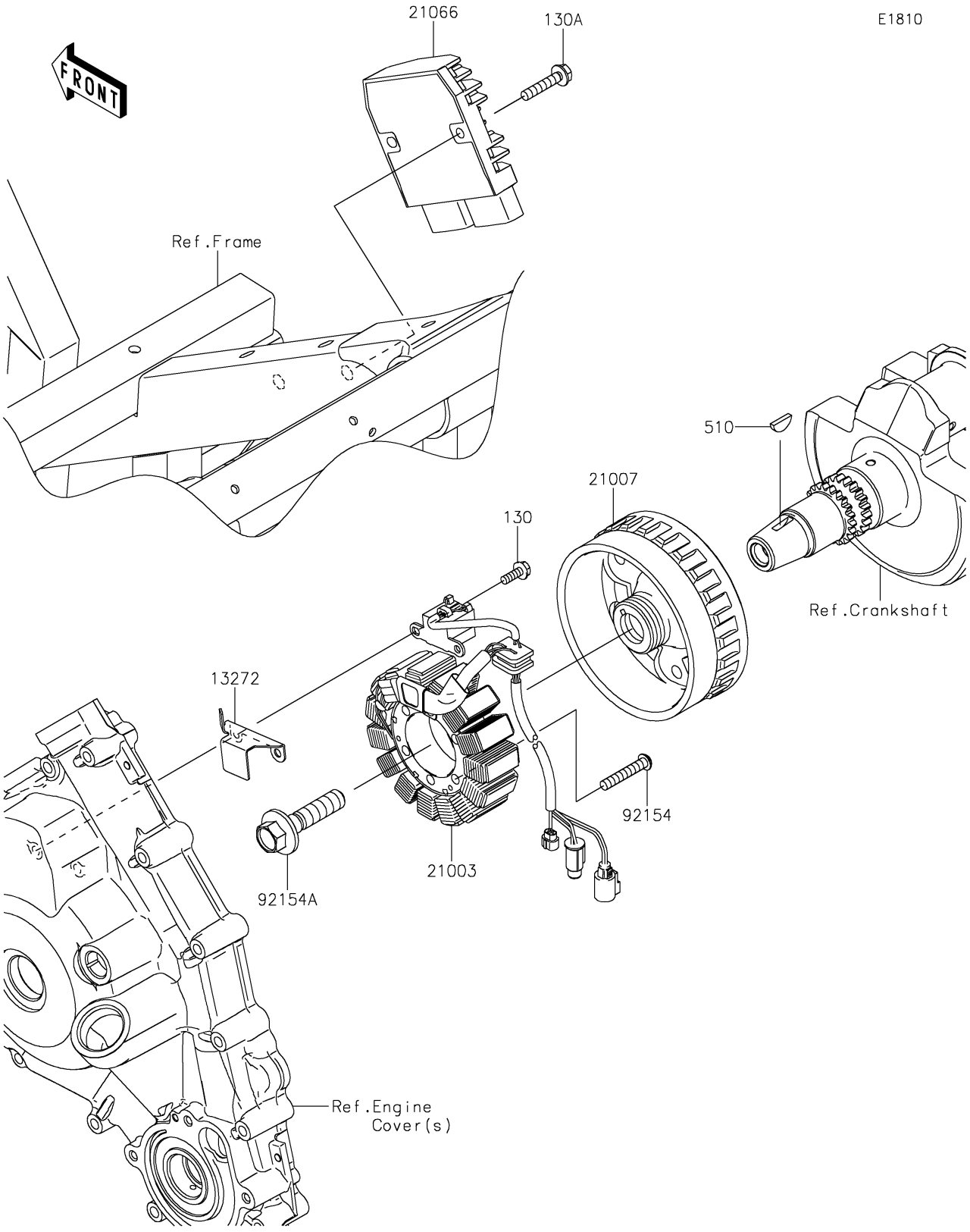

© 2026 Kawasaki Motors Corp., U.S.A.

2025 TERYX4™

PARTS LIST

Generator

ITEM NAME	PART NUMBER	QUANTITY

© 2026 Kawasaki Motors Corp., U.S.A.