2025 TERYX4™

PARTS DIAGRAM

Fuel Injection

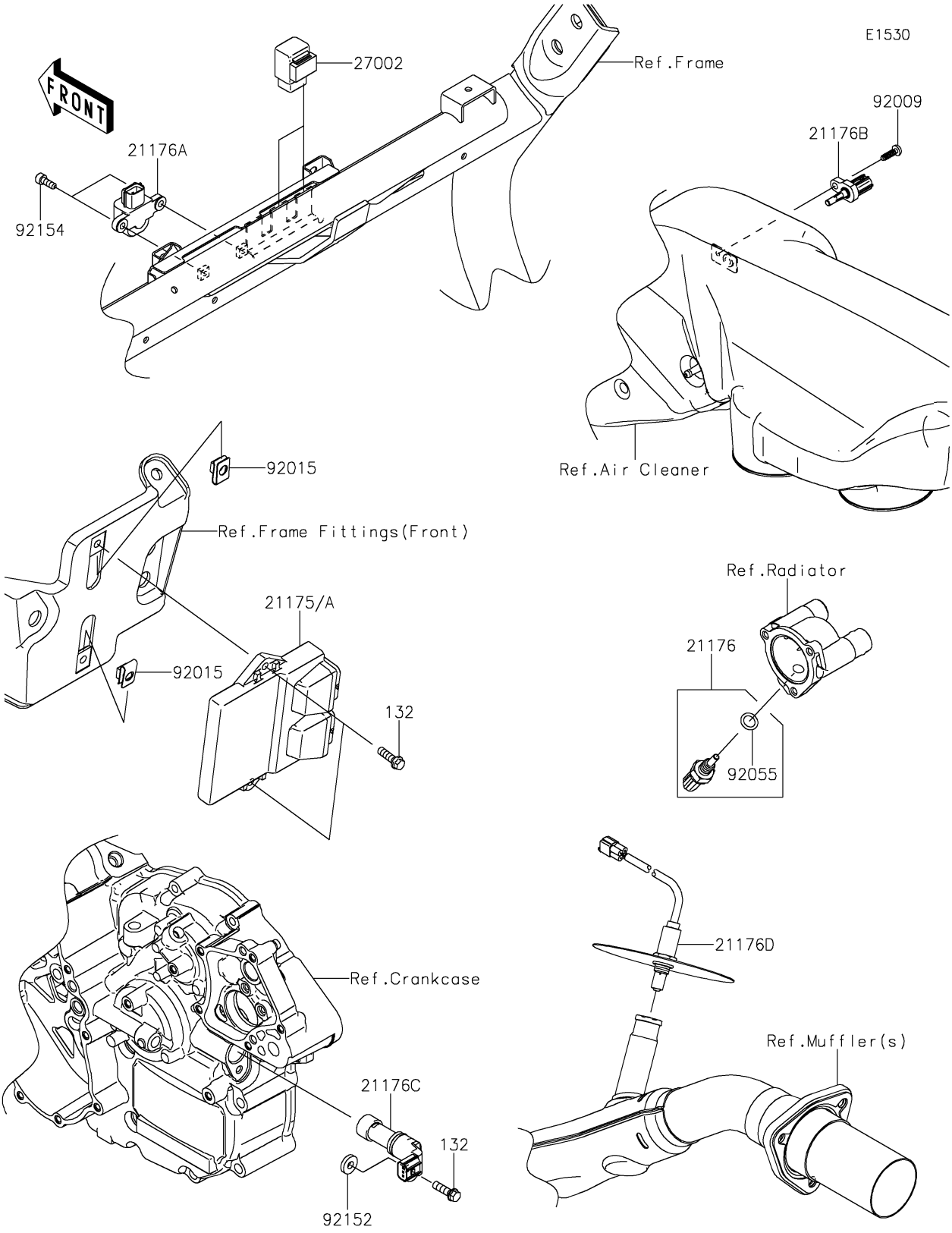

© 2026 Kawasaki Motors Corp., U.S.A.

2025 TERYX4™

PARTS LIST

Fuel Injection

Kawasaki
Let the Good Times Roll®

ITEM NAME	PART NUMBER	QUANTITY

© 2026 Kawasaki Motors Corp., U.S.A.