2022 TERYX4™

PARTS DIAGRAM

Crankcase

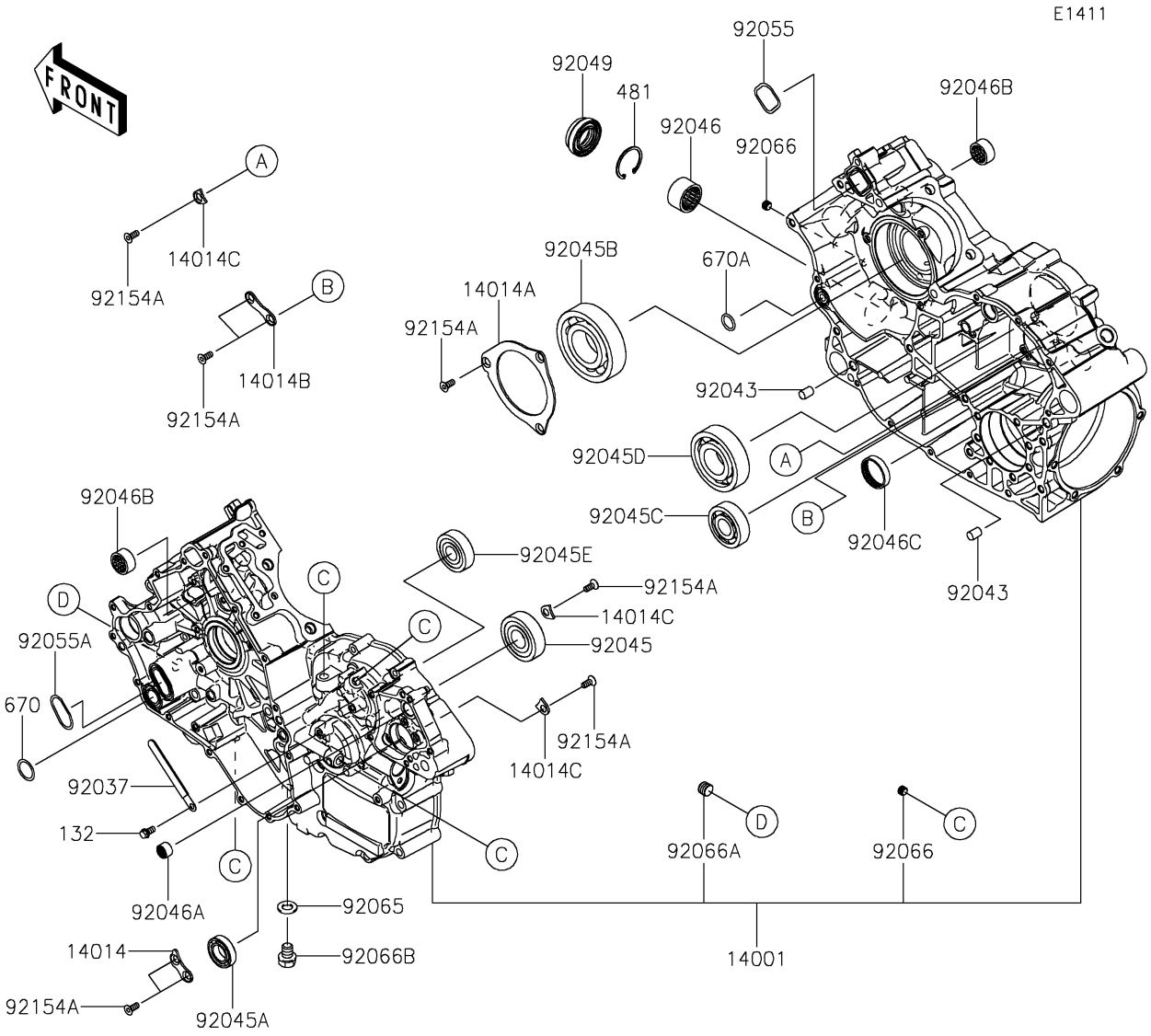

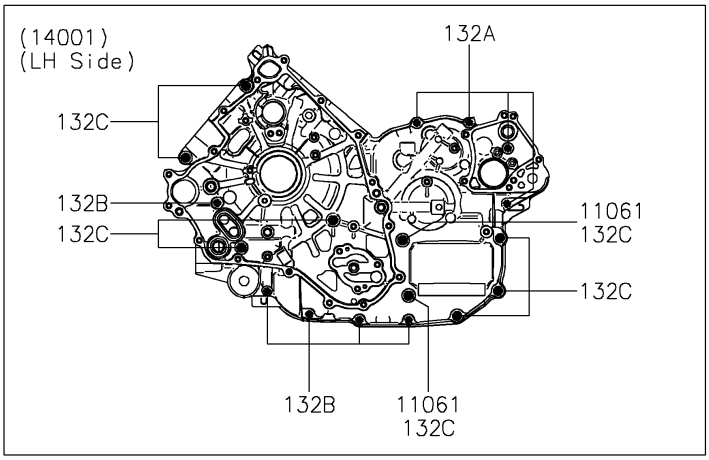

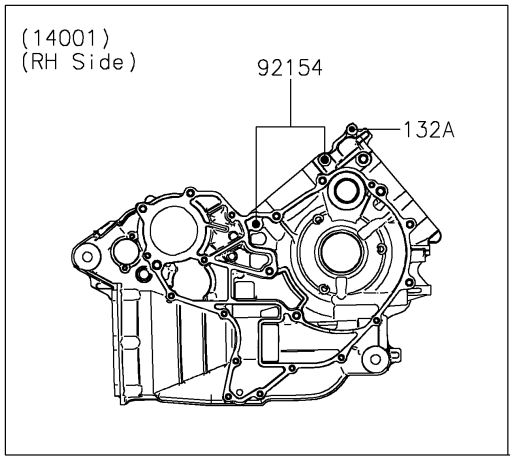

© 2026 Kawasaki Motors Corp., U.S.A.

2022 TERYX4™

PARTS LIST

Crankcase

ITEM NAME	PART NUMBER	QUANTITY

© 2026 Kawasaki Motors Corp., U.S.A.