2000 Ninja® ZX™-7R

PARTS DIAGRAM

Frame

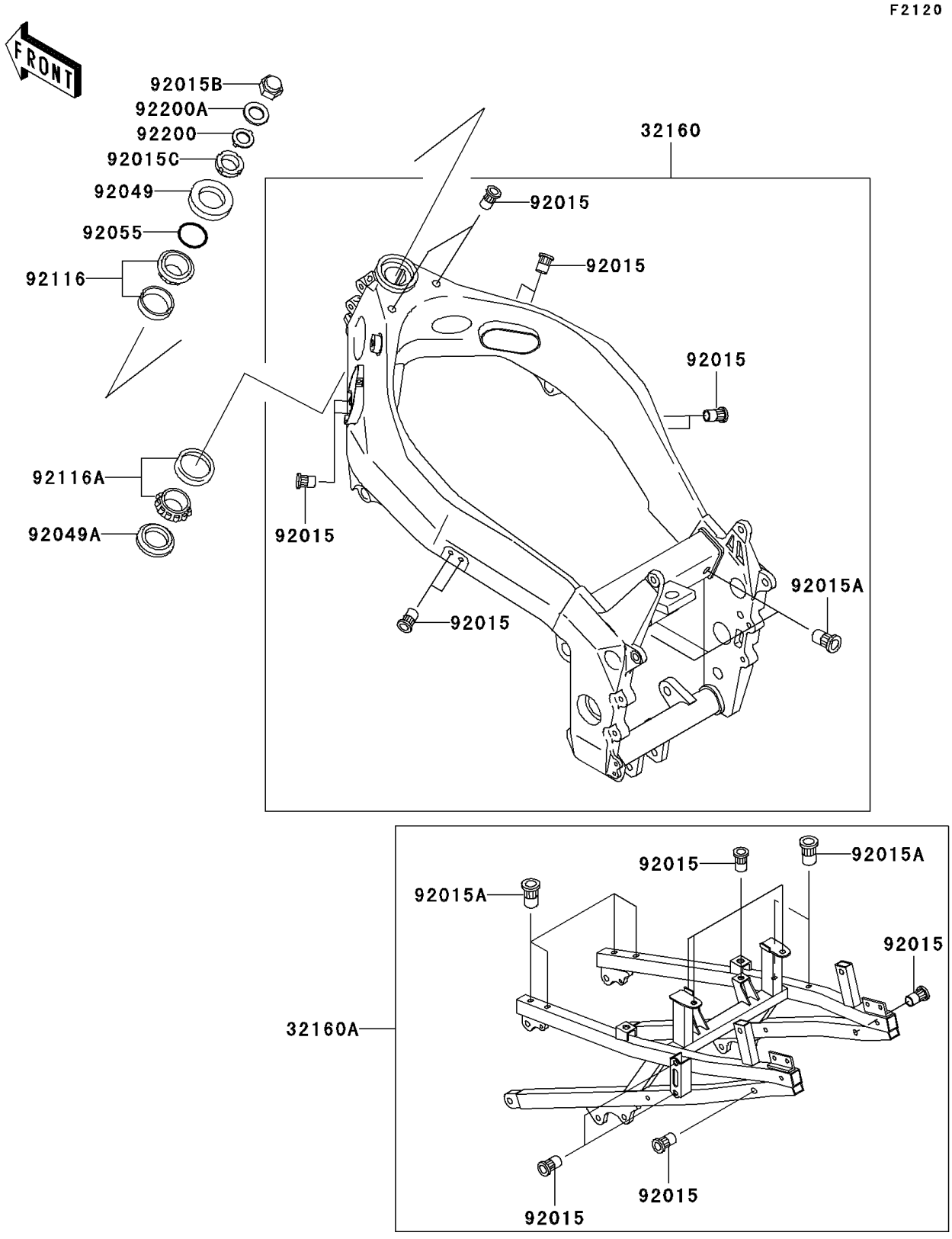

© 2026 Kawasaki Motors Corp., U.S.A.

2000 Ninja® ZX™-7R

PARTS LIST

Frame

ITEM NAME	PART NUMBER	QUANTITY
FRAME-COMP,AL,FR,C.GRAY (Ref # 32160)	32160-1423-EZ	1
FRAME-COMP,AL,RR,C.GRAY (Ref # 32160A)	32160-1424-EZ	1
NUT,POP,6MM,L=15 (Ref # 92015)	92015-1791	18
NUT,POP,6MM,L=16.5 (Ref # 92015A)	92015-1792	9
NUT,CAP,25MM (Ref # 92015B)	92015-1847	1
NUT,STEERING STEM,35MM (Ref # 92015C)	92015-1848	1
SEAL-OIL,HX043N2-A (Ref # 92049)	92049-1436	1
SEAL-OIL,MX043N1-A (Ref # 92049A)	92049-1437	1
RING-O,34.5X2.0 (Ref # 92055)	92055-1452	1
BEARING-ROLLER,32907JR-2 (Ref # 92116)	92116-1072	1
BEARING-ROLLER,32907JR-3 (Ref # 92116A)	92116-1074	1
WASHER,CLAW,25.5X40X2.3 (Ref # 92200)	92200-1083	1
WASHER,25.5X42X2.3 (Ref # 92200A)	92200-1084	1

© 2026 Kawasaki Motors Corp., U.S.A.