2025 TERYX® S LE

PARTS DIAGRAM

Crankcase

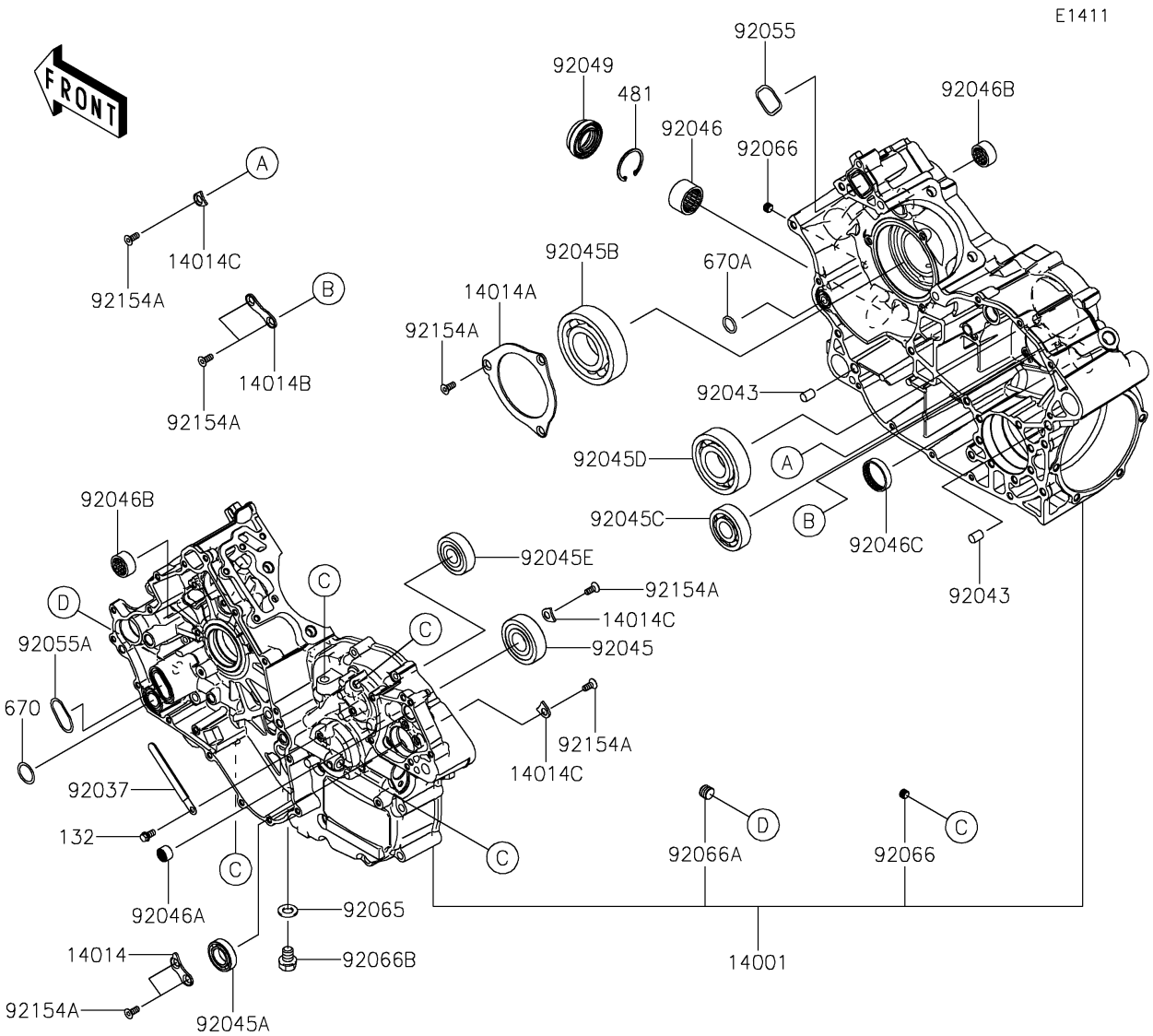

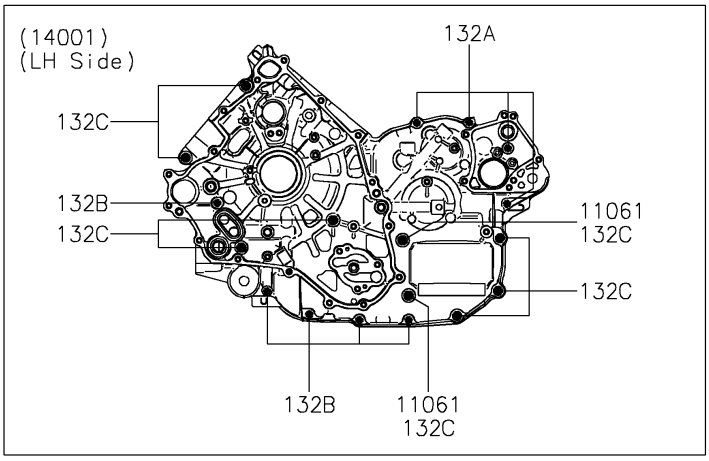

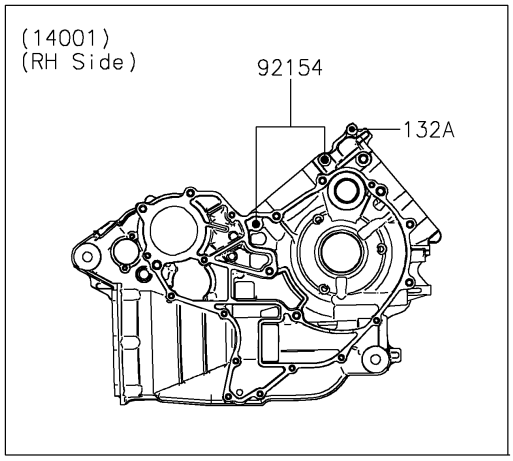

© 2026 Kawasaki Motors Corp., U.S.A.

2025 TERYX® S LE

PARTS LIST

Crankcase

ITEM NAME	PART NUMBER	QUANTITY

© 2026 Kawasaki Motors Corp., U.S.A.