2024 Teryx® S

PARTS DIAGRAM

Converter Cover

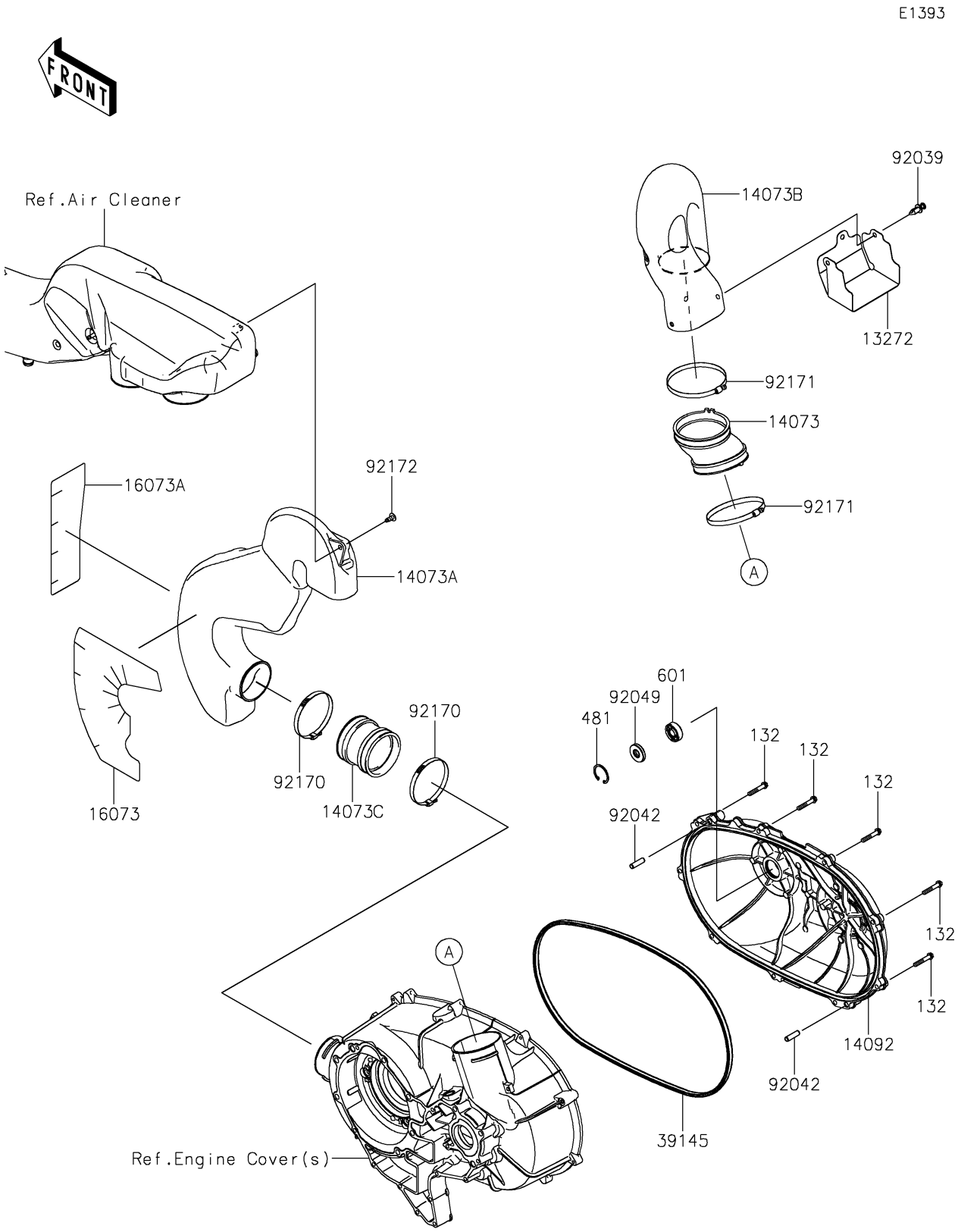

© 2026 Kawasaki Motors Corp., U.S.A.

2024 Teryx® S

PARTS LIST

Converter Cover

ITEM NAME	PART NUMBER	QUANTITY
PLATE (Ref # 13272)	13272-2060	1
DUCT,JOINT (Ref # 14073)	14073-0307	1
DUCT,INTAKE (Ref # 14073A)	14073-0760	1
DUCT,EXHAUST (Ref # 14073B)	14073-0839	1
DUCT,JOINT (Ref # 14073C)	14073-1805	1
COVER,CVT (Ref # 14092)	14092-0266	1
INSULATOR (Ref # 16073)	16073-0843	1
INSULATOR (Ref # 16073A)	16073-0844	1
TRIM-SEAL,CVT COVER (Ref # 39145)	39145-0043	1
RIVET (Ref # 92039)	92039-0776	3
PIN,DOWEL,8X28 (Ref # 92042)	92042-050	2
SEAL-OIL,12X32X5.8 (Ref # 92049)	92049-0167	1
CLAMP (Ref # 92170)	92170-1763	2
CLAMP (Ref # 92171)	92171-1383	2
SCREW (Ref # 92172)	92172-0297	1
BOLT-FLANGED-SMALL,6X35 (Ref # 132)	132BA0635	9
CIRCLIP-TYPE-C,32MM (Ref # 481)	481J3200	1
BEARING-BALL (Ref # 601)	601A6201	1

© 2026 Kawasaki Motors Corp., U.S.A.