2024 Teryx® S

PARTS DIAGRAM

Gear Change Drum/Shift Fork(s)

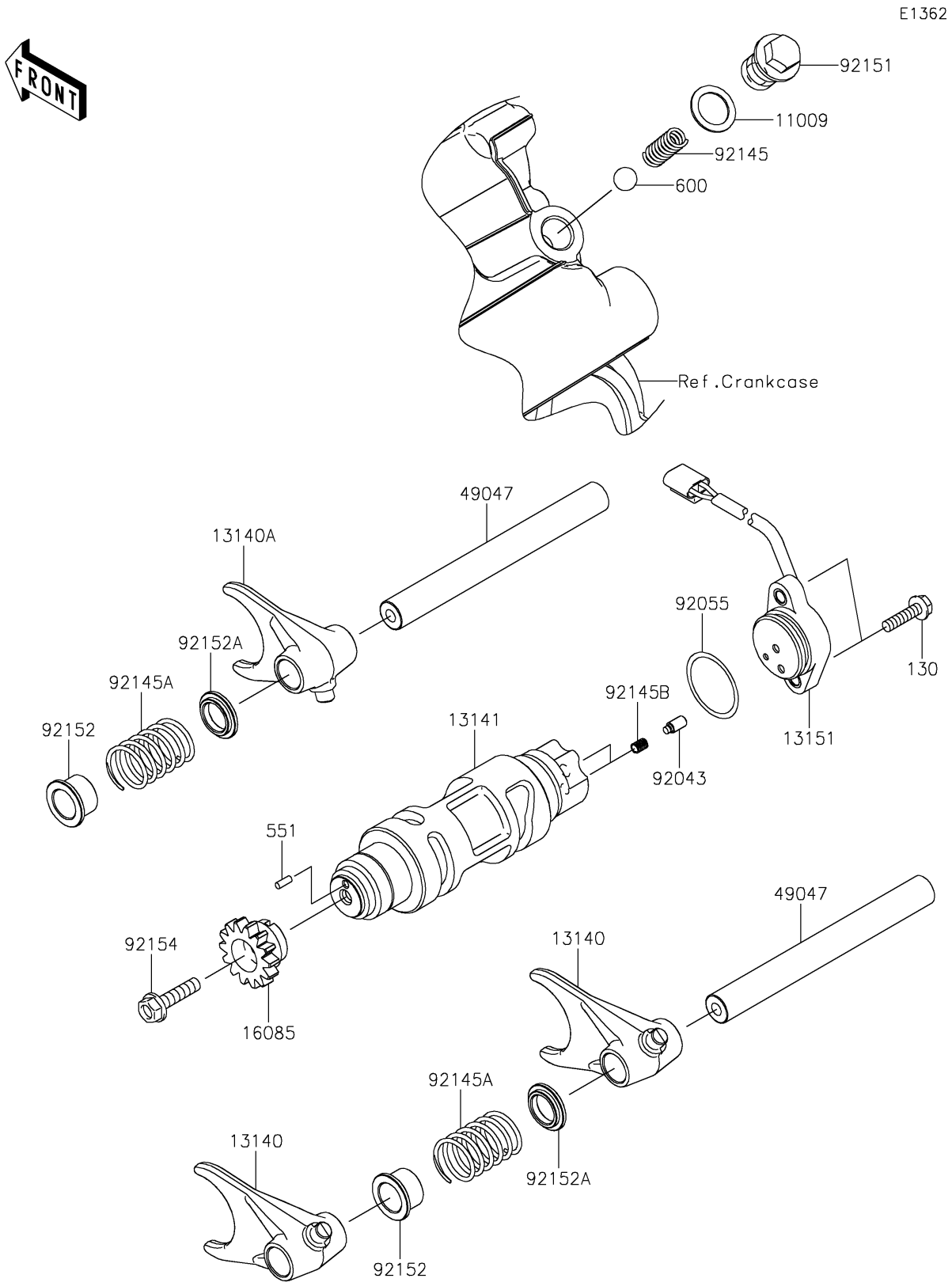

© 2026 Kawasaki Motors Corp., U.S.A.

2024 Teryx® S

PARTS LIST

Gear Change Drum/Shift Fork(s)

Kawasaki
Let the Good Times Roll®

ITEM NAME	PART NUMBER	QUANTITY
GASKET,15.5X22X1 (Ref # 11009)	11009-1008	1
FORK-SHIFT,COUNTER (Ref # 13140)	13140-0622	2
FORK-SHIFT,INPUT (Ref # 13140A)	13140-0623	1
DRUM-CHANGE (Ref # 13141)	13141-0576	1
SWITCH-COMP,GEAR POSITION (Ref # 13151)	13151-0561	1
GEAR,14T (Ref # 16085)	16085-0589	1
ROD-SHIFT (Ref # 49047)	49047-0619	2
PIN (Ref # 92043)	92043-1654	2
RING-O,27.7X2.4 (Ref # 92055)	92055-091	1
SPRING (Ref # 92145)	92145-0828	1
SPRING (Ref # 92145A)	92145-0898	2
SPRING (Ref # 92145B)	92145-1414	2
BOLT (Ref # 92151)	92151-1451	1
COLLAR,14X18X12.5 (Ref # 92152)	92152-2156	2
COLLAR,14X18X4 (Ref # 92152A)	92152-2157	2
BOLT,FLANGED,6X25 (Ref # 92154)	92154-0707	1
BOLT-FLANGED,5X20 (Ref # 130)	130BA0520	2
PIN-DOWEL,3X8 (Ref # 551)	551A0308	1
BALL-STEEL,13/32 (Ref # 600)	600A1300	1

© 2026 Kawasaki Motors Corp., U.S.A.