2000 Ninja® ZX™-7R

PARTS DIAGRAM

Carburetor Parts

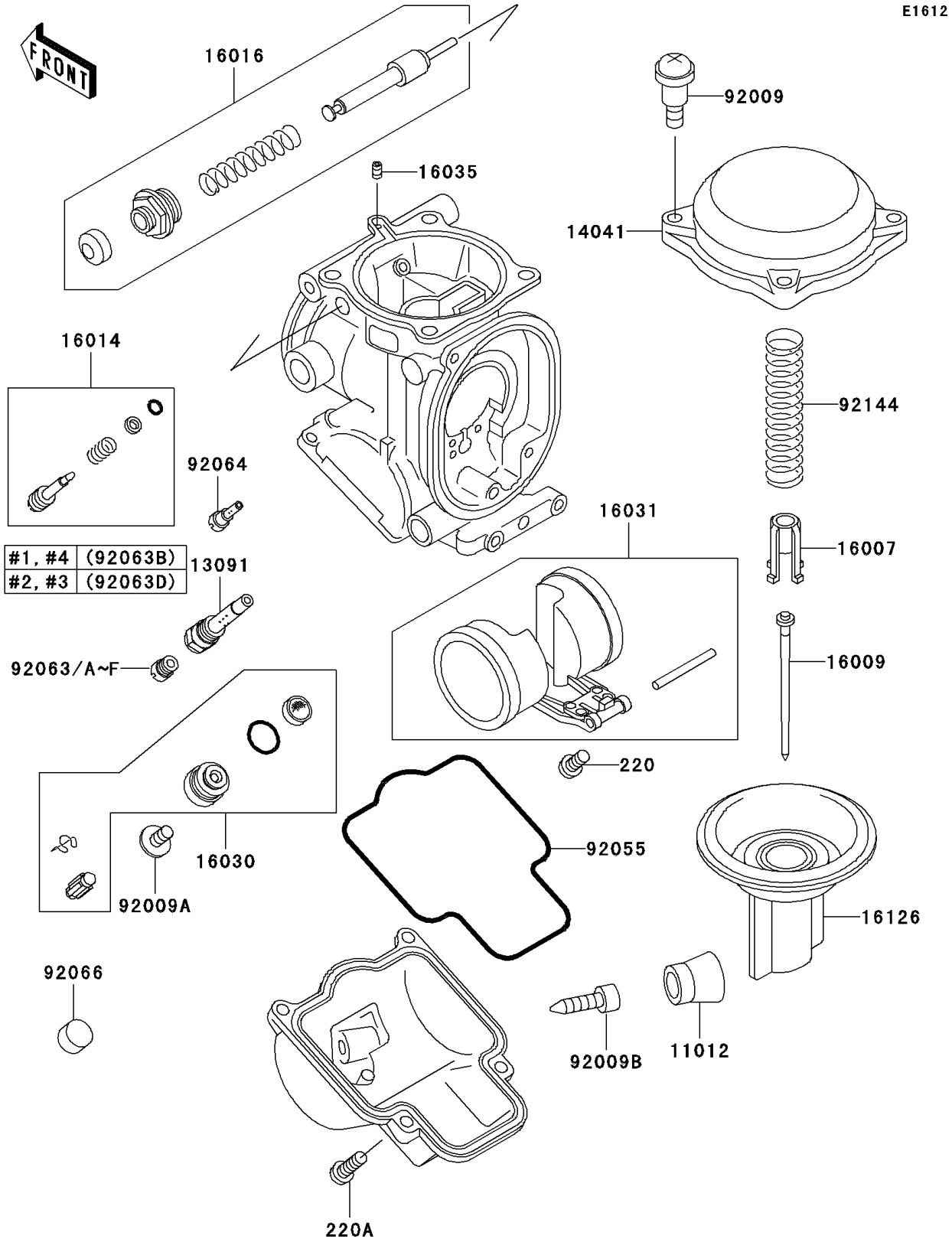

© 2026 Kawasaki Motors Corp., U.S.A.

2000 Ninja® ZX™-7R

PARTS LIST

Carburetor Parts

ITEM NAME	PART NUMBER	QUANTITY
SCREW-PAN-CROS (Ref # 220)	220D0408	4
SCREW-PAN-CROS (Ref # 220A)	220D0414	16
CAP,DRAIN SCREW (Ref # 11012)	11012-1675	4
HOLDER,NEEDLE JET (Ref # 13091)	13091-1887	4
COVER-COMP,MIXING (Ref # 14041)	14041-1100	4
SEAT-SPRING,VALVE (Ref # 16007)	16007-1117	4
NEEDLE-JET,N14Q (Ref # 16009)	16009-1892	4
SCREW-PILOT AIR (Ref # 16014)	16014-1086	4
PLUNGER,STARTER (Ref # 16016)	16016-1090	4
VALVE-FLOAT (Ref # 16030)	16030-1076	4
FLOAT (Ref # 16031)	16031-1080	4
JET-AIR,LEAK (Ref # 16035)	16035-1055	4
VALVE,VACUUM (Ref # 16126)	16126-1319	4
SCREW,4X4.4 (Ref # 92009)	92009-1549	15
SCREW,4X8 (Ref # 92009A)	92009-1550	4
SCREW,DRAIN,M6X0.75 (Ref # 92009B)	92009-1551	4
RING-O,FLOAT CHAMBER (Ref # 92055)	92055-1426	4
JET-MAIN,#160 (Ref # 92063)	92063-1345	4
JET-MAIN,#165 (Ref # 92063A)	92063-1347	4
JET-MAIN,#170 (Ref # 92063B)	92063-1386	2
JET-MAIN,#175 (Ref # 92063C)	92063-1387	4
JET-MAIN,#180 (Ref # 92063D)	92063-1388	2
JET-MAIN,#185 (Ref # 92063E)	92063-1390	4
JET-MAIN,#190 (Ref # 92063F)	92063-1391	4
JET-PILOT,#35 (Ref # 92064)	92064-1101	4
PLUG,PILOT AIR SCREW,6.9X2 (Ref # 92066)	92066-1051	4
SPRING,VACUUM VALVE (Ref # 92144)	92144-1962	4

© 2026 Kawasaki Motors Corp., U.S.A.