2023 TERYX®

PARTS DIAGRAM

Fuel Evaporative System(CA)

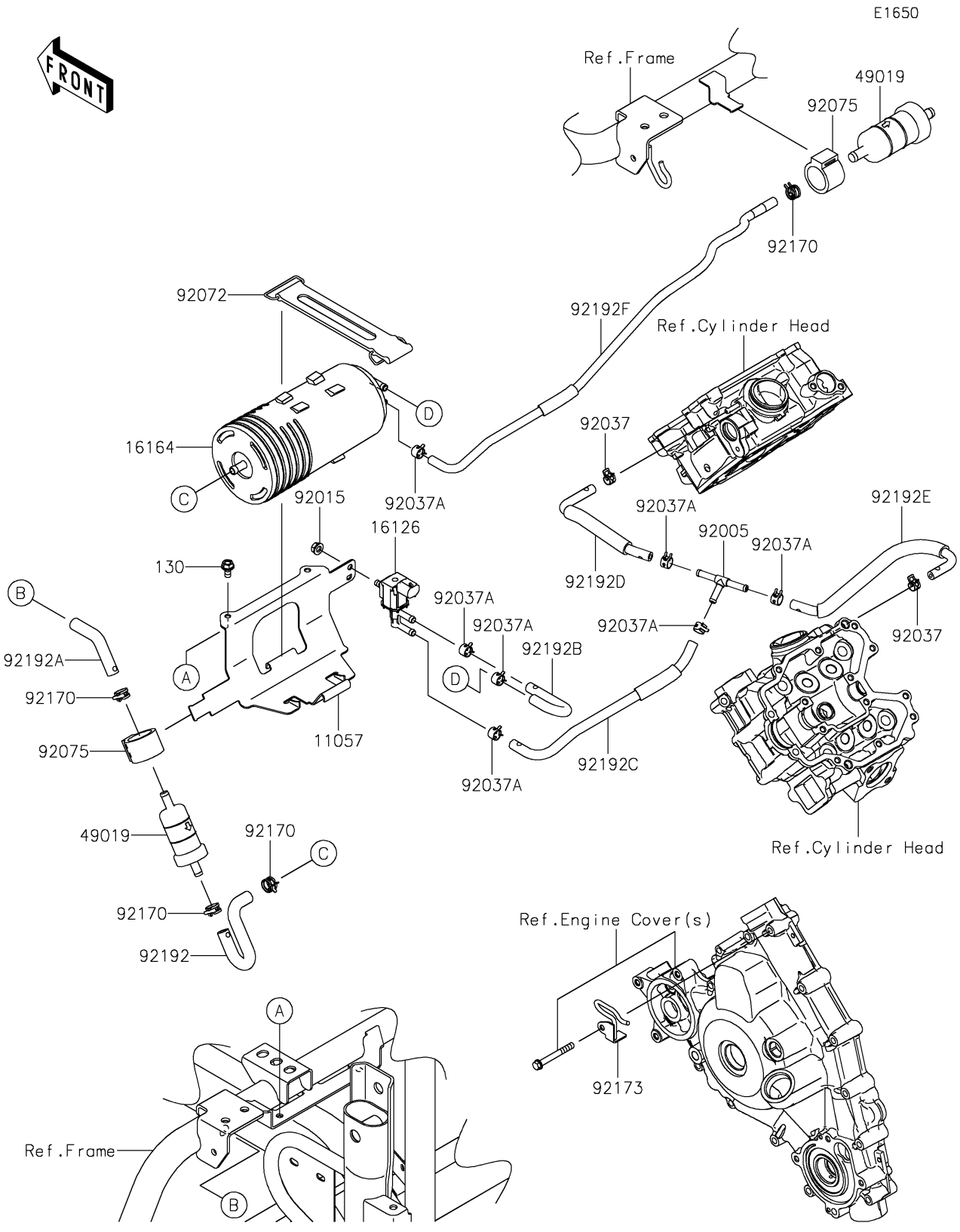

© 2026 Kawasaki Motors Corp., U.S.A.

2023 TERYX®

PARTS LIST

Fuel Evaporative System(CA)

ITEM NAME	PART NUMBER	QUANTITY
BRACKET,CANISTER (Ref # 11057)	11057-0609	1
VALVE,SOLENOID (Ref # 16126)	16126-0705	1
CANISTER (Ref # 16164)	16164-0016	1
FILTER-FUEL (Ref # 49019)	49019-0032	2
FITTING,T (Ref # 92005)	92005-0885	1
NUT,FLANGED,6MM (Ref # 92015)	92015-1367	1
CLAMP,TUBE (Ref # 92037)	92037-1461	2
CLAMP (Ref # 92037A)	92037-2113	7
BAND,L=168 (Ref # 92072)	92072-1306	1
DAMPER,FUEL FILTER (Ref # 92075)	92075-1853	2
CLAMP (Ref # 92170)	92170-2082	4
CLAMP,TUBE GUIDE (Ref # 92173)	92173-1837	1
TUBE,CANISTER-FUEL FILTER (Ref # 92192)	92192-1737	1
TUBE,AIR-FUEL FILTER (Ref # 92192A)	92192-1738	1
TUBE,CANISTER-VALVE (Ref # 92192B)	92192-1739	1
TUBE,VALVE-FITTING (Ref # 92192C)	92192-1740	1
TUBE,FITTING-HEAD(FR) (Ref # 92192D)	92192-1742	1
TUBE,FITTING-HEAD(RR) (Ref # 92192E)	92192-1743	1
TUBE,FILTER-FUEL-CANISTER (Ref # 92192F)	92192-2258	1
BOLT-FLANGED,6X12 (Ref # 130)	130BA0612	2

© 2026 Kawasaki Motors Corp., U.S.A.