2023 TERYX®

PARTS DIAGRAM

Drive Converter

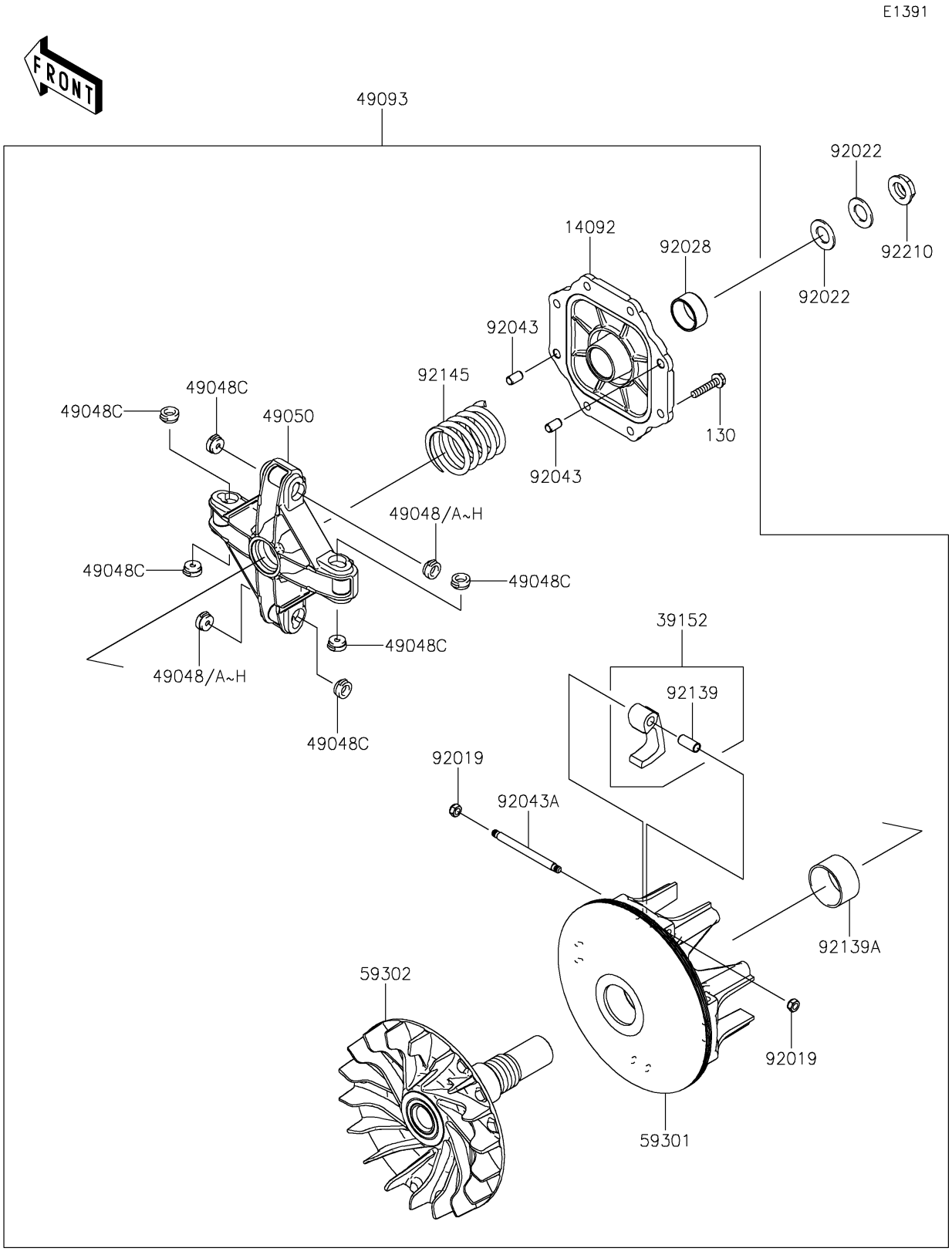

© 2026 Kawasaki Motors Corp., U.S.A.

2023 TERYX®

PARTS LIST

Drive Converter

ITEM NAME	PART NUMBER	QUANTITY
COVER (Ref # 14092)	14092-1107	1
WEIGHT-RAMP (Ref # 39152)	39152-0042	4
SHOE,T=7.2 (Ref # 49048)	49048-1087	AR
SHOE,T=7.3 (Ref # 49048A)	49048-1088	AR
SHOE,T=7.4 (Ref # 49048B)	49048-1089	AR
SHOE,T=7.5 (Ref # 49048C)	49048-1090	8
SHOE,T=7.6 (Ref # 49048D)	49048-1091	AR
SHOE,T=7.7 (Ref # 49048E)	49048-1092	AR
SHOE,T=7.8 (Ref # 49048F)	49048-1093	AR
SHOE,T=7.9 (Ref # 49048G)	49048-1094	AR
SHOE,T=8.0 (Ref # 49048H)	49048-1095	AR
SPIDER (Ref # 49050)	49050-0039	1
CONVERTER-ASSY-DRIVE (Ref # 49093)	49093-0049	1
SHEAVE-MOVABLE (Ref # 59301)	59301-0029	1
SHEAVE-COMP (Ref # 59302)	59302-0087	1
NUT,LOCK,6MM (Ref # 92019)	92019-008	8
WASHER,16.3X29X1.75 (Ref # 92022)	92022-1356	2
BUSHING,KICK LEVER,OUTSIDE (Ref # 92028)	92028-1900	1
PIN,6.2X8X14 (Ref # 92043)	92043-1263	2
PIN (Ref # 92043A)	92043-1688	4
BUSHING (Ref # 92139)	92139-0852	4
BUSHING (Ref # 92139A)	92139-1244	1
SPRING (Ref # 92145)	92145-0958	1
NUT,LEFT HANDED,16MM (Ref # 92210)	92210-0350	1
BOLT-FLANGED,6X30 (Ref # 130)	130CA0630	8

© 2026 Kawasaki Motors Corp., U.S.A.