2000 Ninja® ZX™-7R

PARTS DIAGRAM

Crankcase Bolt Pattern

E1412

Crankcase Upper

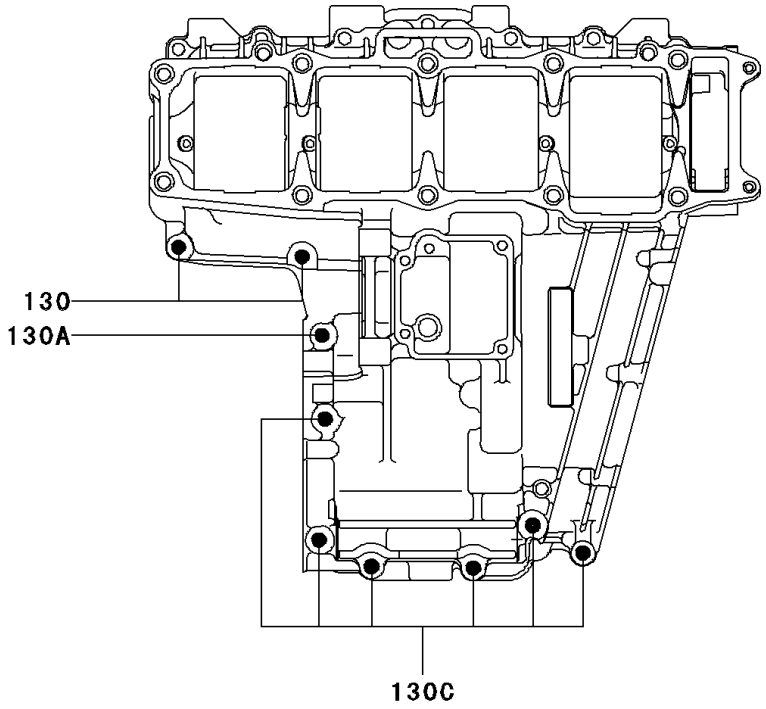

Crankcase Lower

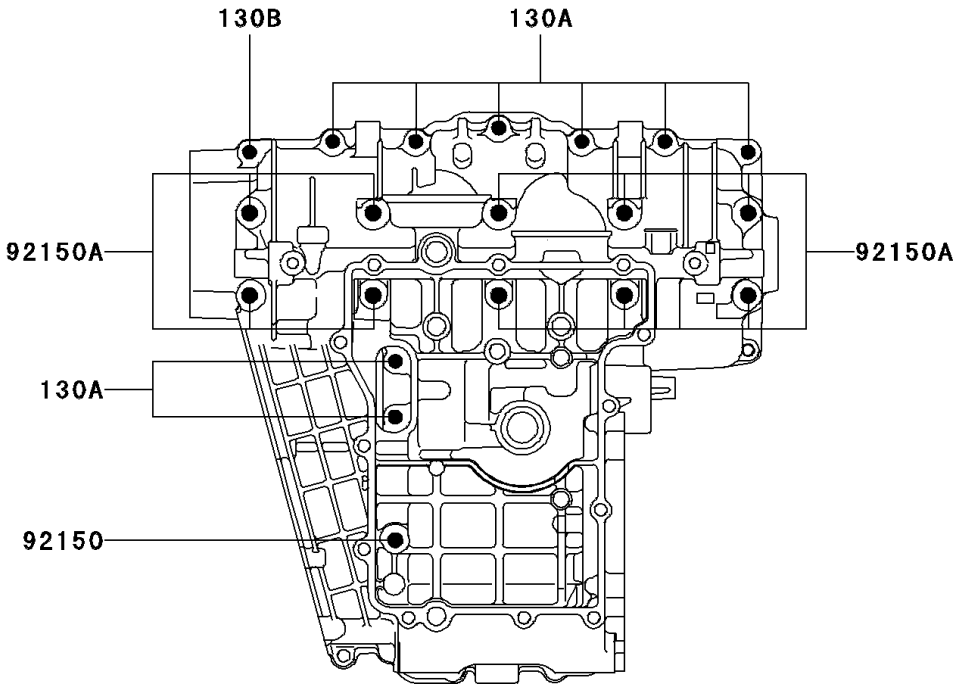

© 2026 Kawasaki Motors Corp., U.S.A.

2000 Ninja® ZX™-7R

PARTS LIST

Crankcase Bolt Pattern

ITEM NAME	PART NUMBER	QUANTITY
BOLT-FLANGED (Ref # 130)	130Z0835	2
BOLT-FLANGED (Ref # 130A)	130Z0840	9
BOLT-FLANGED (Ref # 130B)	130Z0845	1
BOLT-FLANGED (Ref # 130C)	130Z0870	6
BOLT,8X115 (Ref # 92150)	92150-1550	1
BOLT,9X95 (Ref # 92150A)	92150-1759	10

© 2026 Kawasaki Motors Corp., U.S.A.