2000 Ninja® ZX™-7R

PARTS DIAGRAM

Gear Change Drum/Shift Fork(s)

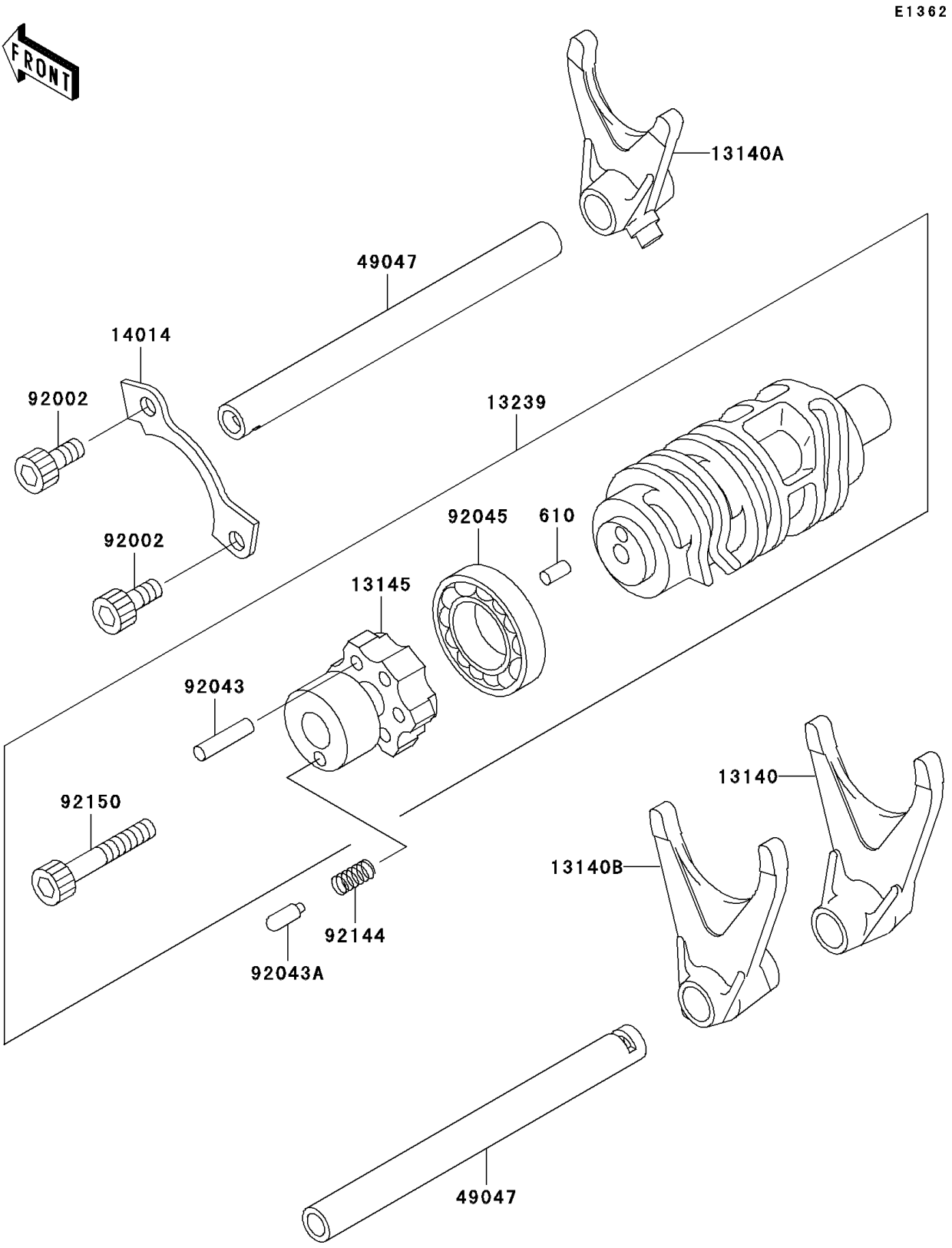

© 2026 Kawasaki Motors Corp., U.S.A.

2000 Ninja® ZX™-7R

PARTS LIST

Gear Change Drum/Shift Fork(s)

ITEM NAME	PART NUMBER	QUANTITY
ROLLER,4X8 (Ref # 610)	610A0408	1
FORK-SHIFT,OUTPUT,TOP (Ref # 13140)	13140-1254	1
FORK-SHIFT,INPUT,3RD&4TH (Ref # 13140A)	13140-1255	1
FORK-SHIFT,OUTPUT,5TH (Ref # 13140B)	13140-1256	1
CAM-CHANGE DRUM (Ref # 13145)	13145-1083	1
DRUM-ASSY-CHANGE (Ref # 13239)	13239-1193	1
PLATE-POSITION (Ref # 14014)	14014-1126	1
ROD-SHIFT (Ref # 49047)	49047-1082	2
BOLT,SOCKET,6X14 (Ref # 92002)	92002-1192	2
PIN,5X21.8 (Ref # 92043)	92043-1518	6
PIN (Ref # 92043A)	92043-1523	1
BEARING-BALL,16005(NTN) (Ref # 92045)	92045-1045	1
SPRING (Ref # 92144)	92144-1245	1
BOLT,SOCKET,6X40 (Ref # 92150)	92150-1958	1

© 2026 Kawasaki Motors Corp., U.S.A.