2021 TERYX4™ Camo

PARTS DIAGRAM

Rear Suspension

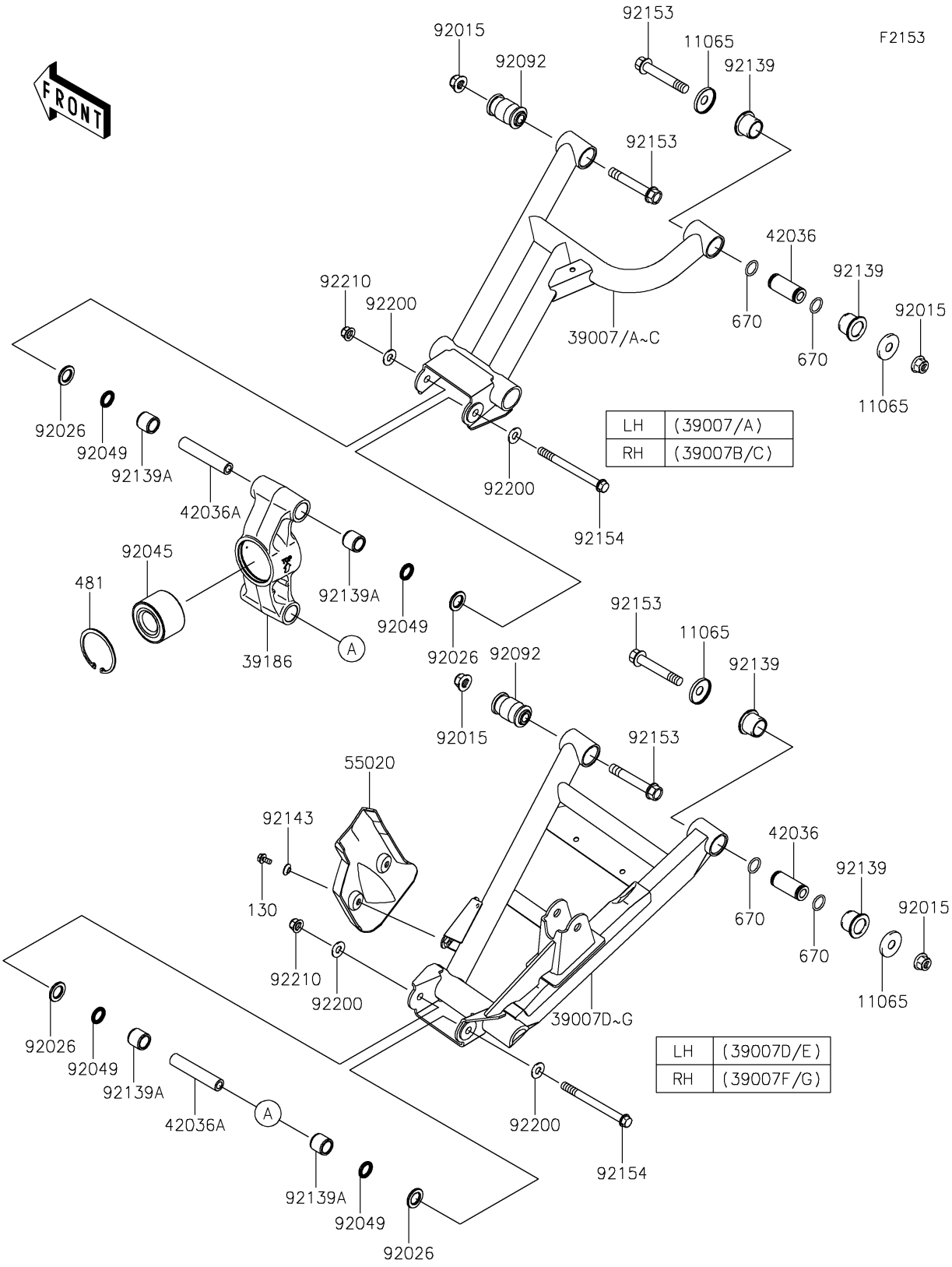

LH	(39007/A)
RH	(39007B/C)

LH	(39007D/E)
RH	(39007F/G)

© 2026 Kawasaki Motors Corp., U.S.A.

2021 TERYX4™ Camo

PARTS LIST

Rear Suspension

ITEM NAME	PART NUMBER	QUANTITY
CAP (Ref # 11065)	11065-0253	8
ARM-SUSP,RR,UPP,LH,P.C.L.GREEN (Ref # 39007)	39007-0449-42Q	1
ARM-SUSP,RR,UPP,LH,P.C.P.RED (Ref # 39007A)	39007-0449-57C	1
ARM-SUSP,RR,UPP,RH,P.C.L.GREEN (Ref # 39007B)	39007-0450-42Q	1
ARM-SUSP,RR,UPP,RH,P.C.P.RED (Ref # 39007C)	39007-0450-57C	1
ARM-SUSP,RR,LWR,LH,P.C.L.GREEN (Ref # 39007D)	39007-0451-42Q	1
ARM-SUSP,RR,LWR,LH,P.C.P.RED (Ref # 39007E)	39007-0451-57C	1
ARM-SUSP,RR,LWR,RH,P.C.L.GREEN (Ref # 39007F)	39007-0452-42Q	1
ARM-SUSP,RR,LWR,RH,P.C.P.RED (Ref # 39007G)	39007-0452-57C	1
KNUCKLE,RR (Ref # 39186)	39186-0316	2
SLEEVE (Ref # 42036)	42036-0062	4
SLEEVE,10X17X88 (Ref # 42036A)	42036-0710	4
GUARD,REAR ARM (Ref # 55020)	55020-0805	2
NUT,LOCK,FLANGED,12MM (Ref # 92015)	92015-1433	8
SPACER,17X28.6X3 (Ref # 92026)	92026-0746	8
BEARING-BALL,30X62X40 (Ref # 92045)	92045-0801	2
SEAL-OIL,17X24X3 (Ref # 92049)	92049-0726	8
BUSHING-RUBBER (Ref # 92092)	92092-0555	4
BUSHING (Ref # 92139)	92139-0231	8
BUSHING,17X24X21.5 (Ref # 92139A)	92139-0736	8
COLLAR (Ref # 92143)	92143-1087	4
BOLT,FLANGED,12X76.5 (Ref # 92153)	92153-1733	8
BOLT,FLANGED,10X117 (Ref # 92154)	92154-0743	4
WASHER,10.3X23X1.6 (Ref # 92200)	92200-2009	8
NUT,LOCK,FLANGED,10MM (Ref # 92210)	92210-1080	4
BOLT-FLANGED,6X12 (Ref # 130)	130BA0612	4
CIRCLIP (Ref # 481)	481J6200	2
O RING,18MM (Ref # 670)	670B2018	8

© 2026 Kawasaki Motors Corp., U.S.A.