2021 TERYX4™ LE CAMO

PARTS DIAGRAM

Headlight(s)

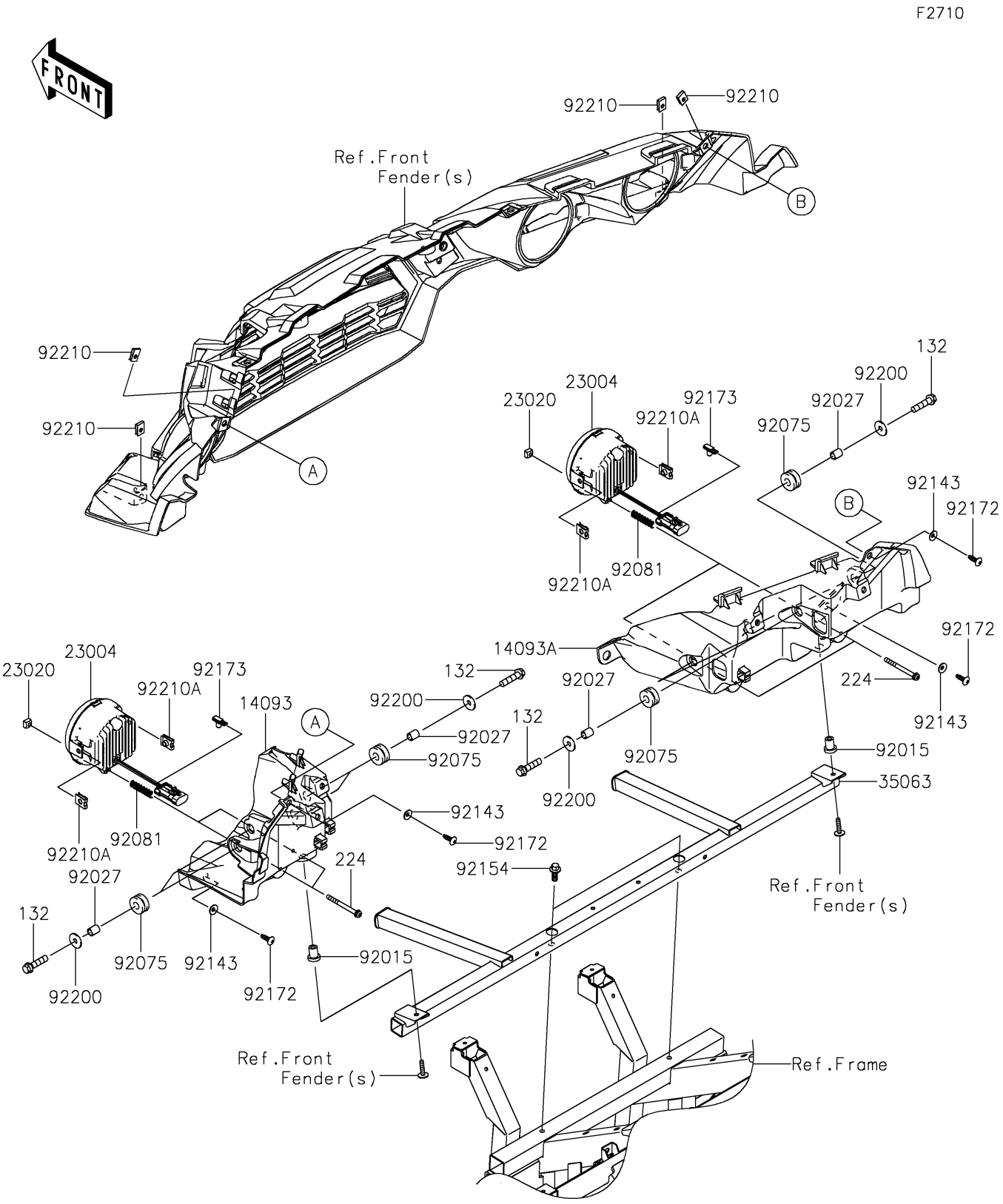

© 2026 Kawasaki Motors Corp., U.S.A.

2021 TERYX4™ LE CAMO

PARTS LIST

Headlight(s)

ITEM NAME	PART NUMBER	QUANTITY
COVER,HEADLIGHT,LH (Ref # 14093)	14093-0207	1
COVER,HEADLIGHT,RH (Ref # 14093A)	14093-0208	1
LAMP-HEAD (Ref # 23004)	23004-0370	4
NUT,4MM,FOCUS ADJUST (Ref # 23020)	23020-018	4
STAY,HEADLAMP (Ref # 35063)	35063-1405	1
NUT,RUBBER,6MM (Ref # 92015)	92015-1692	2
COLLAR,6.8X10X12 (Ref # 92027)	92027-162	8
DAMPER,10X24X12 (Ref # 92075)	92075-1690	8
SPRING,FOCUS ADJUST (Ref # 92081)	92081-1896	4
COLLAR (Ref # 92143)	92143-1087	4
BOLT,FLANGED,8X20 (Ref # 92154)	92154-1226	2
SCREW,TAPPING,6X20 (Ref # 92172)	92172-0488	4
CLAMP (Ref # 92173)	92173-1491	4
WASHER,6.5X20X1.6 (Ref # 92200)	92200-0283	8
NUT,LEAF SPRING,6MM (Ref # 92210)	92210-0624	4
NUT (Ref # 92210A)	92210-1125	8
BOLT-FLANGED-SMALL,6X25 (Ref # 132)	132BA0625	8
SCREW-PAN-WP-CROS,4X45 (Ref # 224)	224AA0445	4

© 2026 Kawasaki Motors Corp., U.S.A.