2021 TERYX4™ LE

PARTS DIAGRAM

Starter Motor

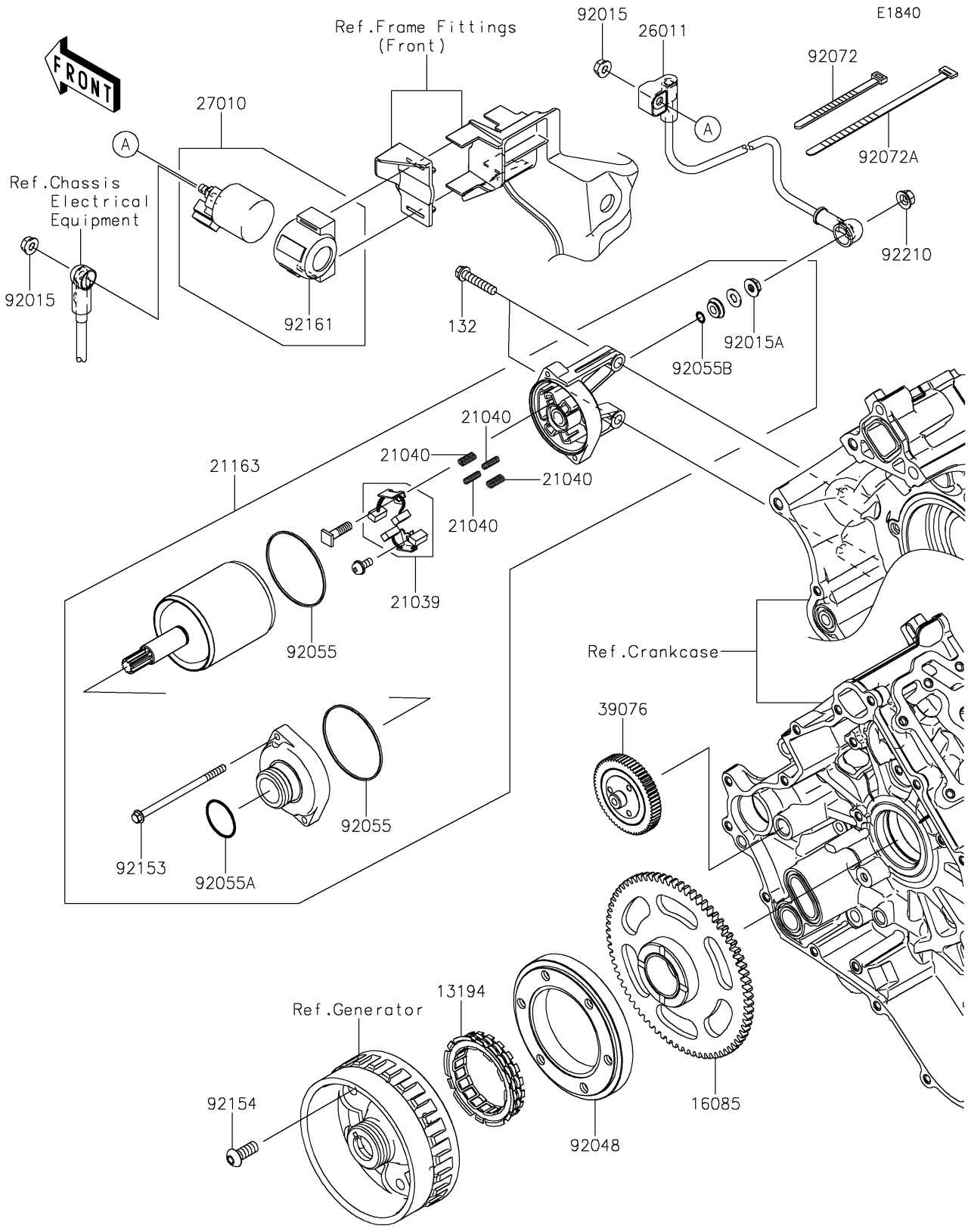

© 2026 Kawasaki Motors Corp., U.S.A.

2021 TERYX4™ LE

PARTS LIST

Starter Motor

ITEM NAME	PART NUMBER	QUANTITY

© 2026 Kawasaki Motors Corp., U.S.A.