2021 TERYX4™ LE CAMO

PARTS DIAGRAM

Cylinder/Piston(s)

Kawasaki
Let the Good Times Roll®

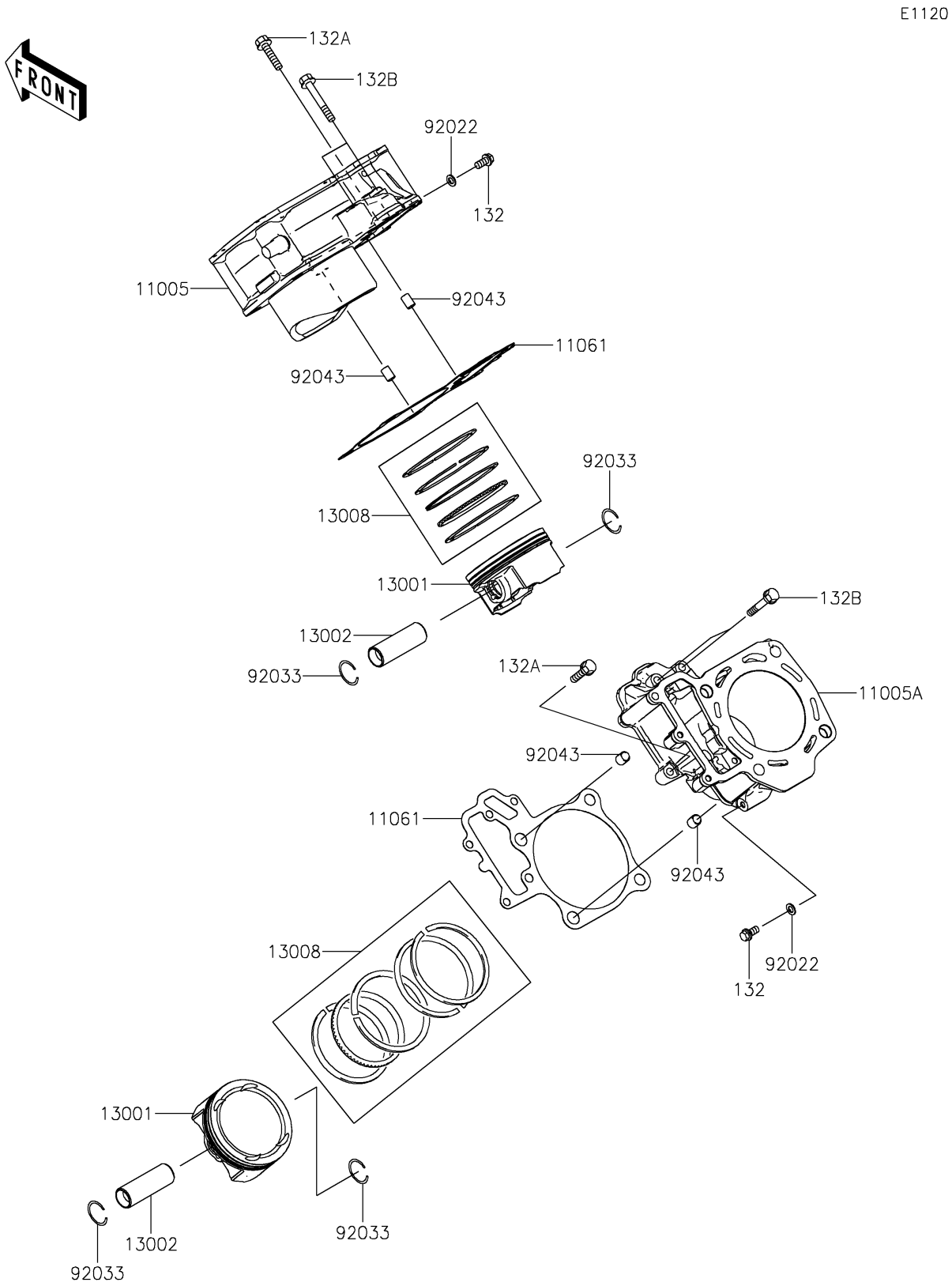

© 2026 Kawasaki Motors Corp., U.S.A.

2021 TERYX4™ LE CAMO

PARTS LIST

Cylinder/Piston(s)

ITEM NAME	PART NUMBER	QUANTITY
CYLINDER-ENGINE,FR (Ref # 11005)	11005-0628	1
CYLINDER-ENGINE,RR (Ref # 11005A)	11005-0629	1
GASKET,CYLINDER BASE (Ref # 11061)	11061-0730	2
PISTON-ENGINE (Ref # 13001)	13001-0740	2
PIN-PISTON (Ref # 13002)	13002-0711	2
RING-SET-PISTON (Ref # 13008)	13008-0042	2
WASHER,6.2X11X1 (Ref # 92022)	92022-304	2
RING-SNAP (Ref # 92033)	92033-1207	4
PIN,10.1X12X14 (Ref # 92043)	92043-4009	4
BOLT-FLANGED-SMALL,6X12 (Ref # 132)	132BA0612	2
BOLT-FLANGED-SMALL,6X30 (Ref # 132A)	132BA0630	2
BOLT-FLANGED-SMALL,6X40 (Ref # 132B)	132BA0640	4

© 2026 Kawasaki Motors Corp., U.S.A.