2021 TERYX4™ LE CAMO

PARTS DIAGRAM

Cylinder Head

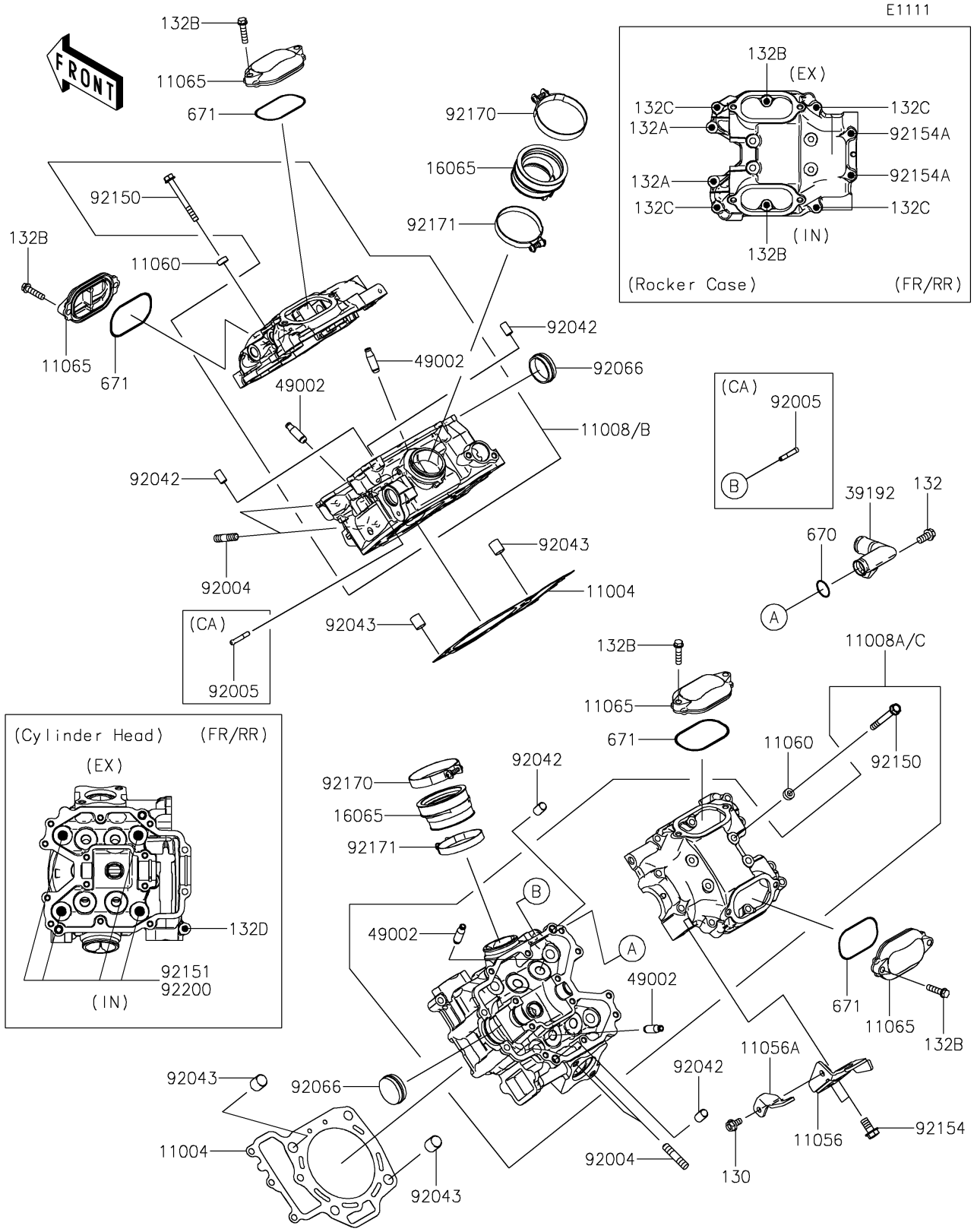

© 2026 Kawasaki Motors Corp., U.S.A.

2021 TERYX4™ LE CAMO

PARTS LIST

Cylinder Head

ITEM NAME	PART NUMBER	QUANTITY
GASKET-HEAD (Ref # 11004)	11004-0713	2
HEAD-COMP-CYLINDER,FR (Ref # 11008B)	11008-0895	1
HEAD-COMP-CYLINDER,RR (Ref # 11008C)	11008-0896	1
BRACKET (Ref # 11056)	11056-1410	1
BRACKET (Ref # 11056A)	11056-1411	1
GASKET,6.2X12X0.3 (Ref # 11060)	11060-1994	8
CAP,ROCKER CASE (Ref # 11065)	11065-0724	4
HOLDER-CARBURETOR (Ref # 16065)	16065-0118	2
PIPE-WATER,RR (Ref # 39192)	39192-0119	1
GUIDE-VALVE (Ref # 49002)	49002-0706	8
STUD,8X22 (Ref # 92004)	92004-1217	4
FITTING (Ref # 92005)	92005-1264	2
PIN,DOWEL,6.3X8X14 (Ref # 92042)	92042-007	4
PIN,10.1X12X14 (Ref # 92043)	92043-4009	4
PLUG (Ref # 92066)	92066-0904	2
BOLT,FLANGED,6X55 (Ref # 92150)	92150-1302	8
BOLT,FLANGED,10X150 (Ref # 92151)	92151-1917	8
BOLT,FLANGED,8X20 (Ref # 92154)	92154-0885	2
BOLT,FLANGED,6X130 (Ref # 92154A)	92154-0993	4
CLAMP (Ref # 92170)	92170-1448	2
CLAMP (Ref # 92171)	92171-0722	2
WASHER,11.5X20.5X1.6 (Ref # 92200)	92200-1128	8
BOLT-FLANGED,6X12 (Ref # 130)	130BA0612	1
BOLT-FLANGED-SMALL,6X12 (Ref # 132)	132BA0612	1
BOLT-FLANGED-SMALL,6X20 (Ref # 132A)	132BA0620	4
BOLT-FLANGED-SMALL,6X25 (Ref # 132B)	132BA0625	12
BOLT-FLANGED-SMALL,6X30 (Ref # 132C)	132BA0630	8
BOLT-FLANGED-SMALL,6X95 (Ref # 132D)	132BA0695	2
O RING,16MM (Ref # 670)	670B2016	1

© 2026 Kawasaki Motors Corp., U.S.A.

2021 TERYX4™ LE CAMO

PARTS LIST

Cylinder Head

ITEM NAME	PART NUMBER	QUANTITY
O RING,55MM (Ref # 671)	671D2555	4
HEAD-COMP-CYLINDER,FR (Ref # 11008)	11008-0790	1
HEAD-COMP-CYLINDER,RR (Ref # 11008A)	11008-0791	1

© 2026 Kawasaki Motors Corp., U.S.A.